FITTING INSTRUCTION

Clamp mark in acc. with		Cables joining
ISO	PN	
1	L	Left directional lights
2	+	Rear fog lights
3	31	Ground
4	R	Right directional lights
5	58R	Right side parking lights
6	54	Stoplights
7	58L	Left side parking lights

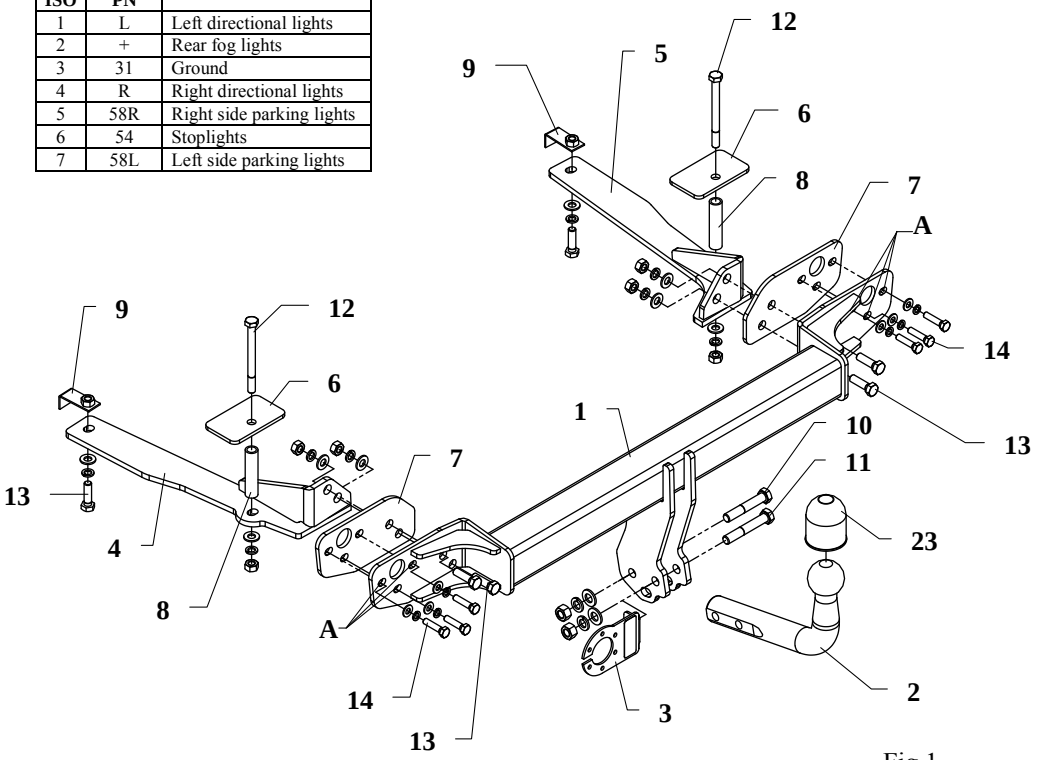

Fig.1

This towbar is designed to assembly in following car:
HONDA ACCORD 4 door, out of motor 2,4l produced since 12.2002 till 2008, catalogue no. **Y30** and is prepared to tow trailers max total weight **1500 kg** and max vertical load **75 kg**.

From manufacturer

Thank you for buying our product. Their reliability has been confirmed in many tests. Reliability of towbar depends also on correct assembly and right operation. For this reasons we kindly ask to read carefully this instruction and apply to hints.

The towbar should be install in points described by a car producer.

Fitting instructions

1. Disassemble bumper and metal reinforcement (not used any more), disassemble side and rear cover plates in trunk.
2. In factory marked points (on the right and left side of the trunk) make holes ø18 mm.
3. In maked holes put sleevesi ø17 mm (pos. 8), length = 73 mm.
4. To rear side put base bar of towbar (pos. 1) in that way, so holes pos. A agree to holes for unscrewed reinforcement and screw using bolts M8x35mm (loosely) – pos. 13.
5. Elements (pos. 4 and 5) put to chassis members and rear side and screw using bolts M10x110 mm (pos. 11) and M10x35mm (pos. 12).
6. Assemble masking cover and bumper after cut his fragment 50x50mm – see fig. 2.

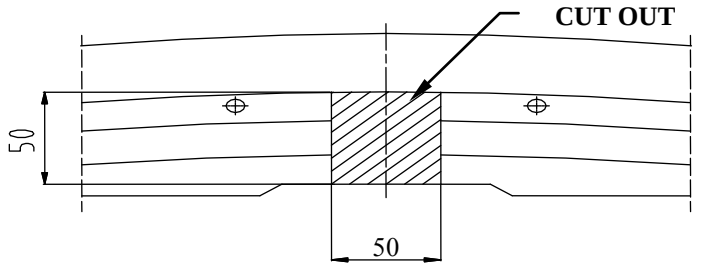

Fig.2.

7. Tighten all bolts according to the torque shown in the table.
8. Fix tow-ball (pos. 2) with socket plate (pos. 3) using bolts M12x75mm (pos. 11) and M12x70mm (pos. 10) from accessories.
9. Connect electric wires of 7-poles socket according to the instruction of the car. (Recommend to make at authorized service station)
10. Complete the paint coating damaged during installation.

Torque settings for nuts and bolts (8,8):	
M 8 - 25 Nm	**M 10** - 55 Nm
M 12 - 85 Nm	**M 14** - 135 Nm

NOTE

After install the towbar you should get adequate registration in registration book (at authorised service station).The car should be equipped with:

- Indicators
- Tow mirrors

After 1000km of exploitation check all bolts and nuts. The ball of towbar must be always kept clear and conserve with a grease.

Towbar accessories:

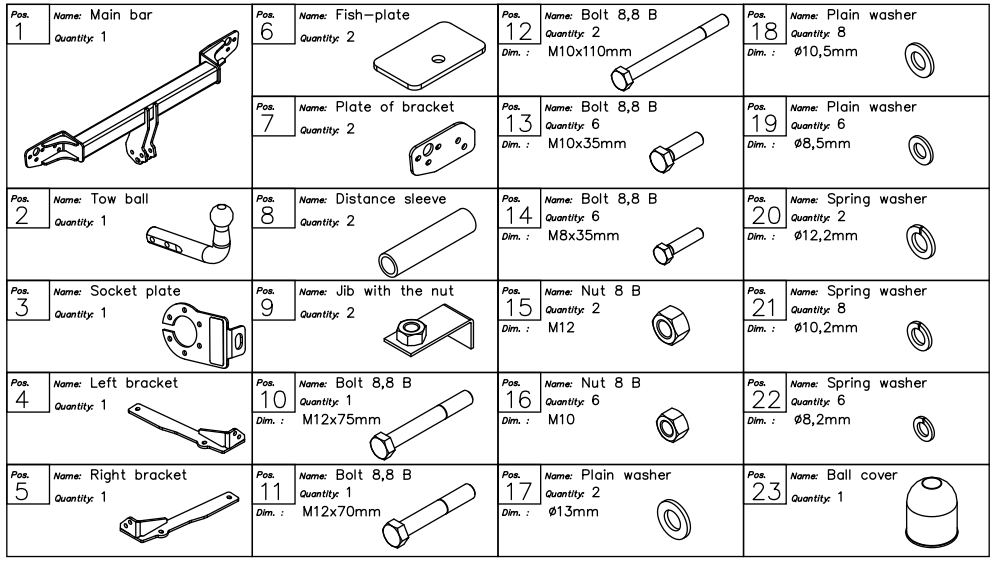

PPUH AUTO-HAK S.J.

Produkcja Zaczepów Kulowych
Henryk & Zbigniew Nejman
76-200 SŁUPSK ul. Słoneczna 16K
tel/fax (059) 8-414-414; 8-414-413
E-mail: office@autohak.com.pl
www. autohak.com.pl

Towing hitch (without electrical set)

Class: **A50-X** Cat. no. **Y30**
Designed for:
Manufacturer: **HONDA**
Model: **ACCORD**
Type: **4 door, out of motor 2,4l**
produced since 12.2002 till 2008

Technical data:
D-value: **8,26 kN**
maximum trailer weight: **1500 kg**
maximum vertical cup load: **75 kg**

Approval number acc. to regulations EKG/ONZ 55.01: E20-55R-01 1175

Foreword

This towbar is designed according to rules of safety traffic regulations. The towing hitch is a safety component and must be installed only by qualified personnel. Any alteration or conversion to the towing hitch is prohibited and would lead to cancellation of design certification. Remove insulating compound and underseal from vehicle (if present) in the area of the matting surfaces of the towing hitch.
The vehicle manufacturer's specifications regarding trailer load and max. vertical cup load are decisive for driving, and values for the towing hitch cannot be exceeded.
D-value formula:

$$\frac{\text{Max trailer weight [kg]} \times \text{Max vehicle weight [kg]}}{\text{Max trailer weight [kg]} + \text{Max vehicle weight [kg]}} \times \frac{9{,}81}{1000} = D\ [\text{kN}]$$