Towbar accessories:

Pos. 1 Name: Main bar Quantity: 1 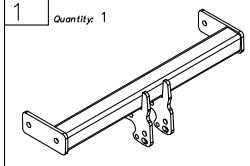	Pos. 5 Name: Right bracket Quantity: 1 	Pos. 10 Name: Bolt 8,8 B Quantity: 4 Dim. : M12x35mm 	Pos. 15 Name: Spring washer Quantity: 8 Dim. : Ø 12,2 mm 
	Pos. 6 Name: Plate of the bracket Quantity: 2 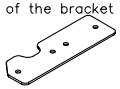	Pos. 11 Name: Nut 8 B Quantity: 2 Dim. : M12 	Pos. 16 Name: Spring washer Quantity: 8 Dim. : Ø 10,2 mm 
Pos. 2 Name: Tow ball Quantity: 1 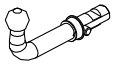	Pos. 7 Name: Distance sleeve Quantity: 8 Dim. : Ø17,2x2,35mm L=69mm 	Pos. 12 Name: Nut 8 B Quantity: 8 Dim. : M10 	Pos. 17 Name: Ball cover Quantity: 1 
Pos. 3 Name: Socket plate Quantity: 1 	Pos. 8 Name: Bolt 8,8 B Quantity: 4 Dim. : M12x25mm 	Pos. 13 Name: Plain washer Quantity: 8 Dim. : Ø 13 mm 	Pos. 18 Name: Body of the automat Quantity: 1 
Pos. 4 Name: Left bracket Quantity: 1 	Pos. 9 Name: Bolt 8,8 B Quantity: 8 Dim. : M10x100mm 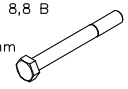	Pos. 14 Name: Plain washer Quantity: 16 Dim. : Ø 10,5 mm 	Pos. 19 Name: Body plug Quantity: 1 

PPUH AUTO-HAK Sp.J.

Produkcja Zaczepów Kulowych
Henryk & Zbigniew Nejman
76-200 SŁUPSK ul. Słoneczna 16K
tel/fax (059) 8-414-414; 8-414-413
E-mail: office@autohak.com.pl
www.autohak.com.pl

Towing hitch (without electrical set)

Class: **A50-X** Cat. no. **Y24A**
Designed for:
Manufacturer: **HONDA**
Model: **CR-V**
produced since 02.2002 till 02.2007

Technical data:
D-value: **9,25 kN**
maximum trailer weight: **1690 kg**
maximum vertical cup mass: **100 kg**

Approval number according to Directive 94/20/EC: e20*94/20*1011*00

Foreword

This towbar is designed according to rules of safety traffic regulations. The towing hitch is a safety component and must be installed only by qualified personnel. Any alteration or conversion to the towing hitch is prohibited and would lead to cancellation of design certification. Remove insulating compound and underseal from vehicle (if present) in the area of the matting surfaces of the towing hitch.
The vehicle manufacturer's specifications regarding trailer load and max. vertical cup load are decisive for driving, and values for the towing hitch must not be exceeded.
D-value formula:

$$\frac{\text{Max trailer weight [kg]} \times \text{Max vehicle weight [kg]}}{\text{Max trailer weight [kg]} + \text{Max vehicle weight [kg]}} \times \frac{9{,}81}{1000} = D\ [\text{kN}]$$

FITTING INSTRUCTION

Clamp mark in acc. with		Cables joining
ISO	PN	
1	L	Left directional lights
2	+	Rear fog lights
3	31	Ground
4	R	Right directional lights
5	58R	Right side parking lights
6	54	Stoplights
7	58L	Left side parking lights

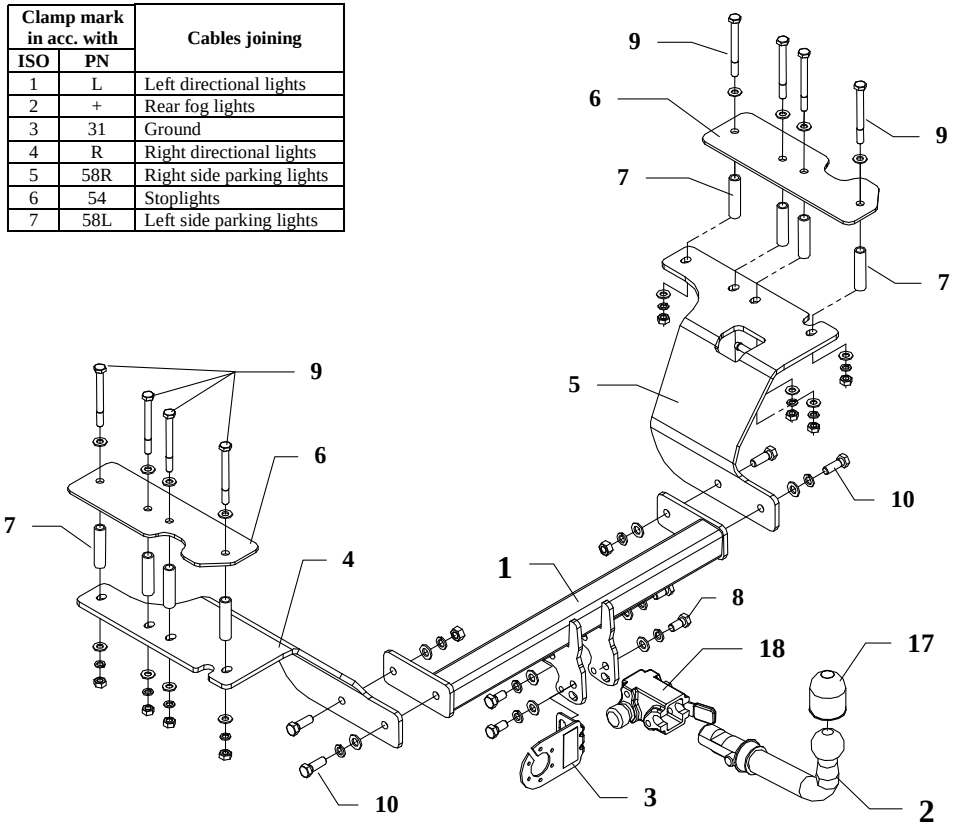

This towbar is designed to assembly in following cars: **HONDA CR-V** produced since 02.2002 till 02.2007, catalogue number **Y24A** and is prepared to tow trailers max total weight **1690 kg** and max vertical mass **100 kg**.

From manufacturer

Thank you for buying our product. Their reliability has been confirmed in many tests. Reliability of towbar depends also on correct assembly and right operation. For this reasons we kindly ask to read carefully this instruction and apply to hints.

The towbar should be install in points described by a car producer.

The instruction of the assembly

1. Take the fitted carpet out the bumper, disassemble plastic bowl and unscrew side plastic panels.
2. Disassemble the muffler.
3. Find 4 signed places on the left and right side of the chassis member, then drill them using a drill ø10,5 mm.
4. Find 4 signed places in the luggage part, then drill them using ø17,5 mm and next position distance sleeves ø17 mm L=69 mm (pos. 7).
5. Position fish-plates (pos. 6) in the trunk – see the drawing.
6. Position the right bracket (pos. 5) at the bottom of the car on the right holes of the chassis member and fix it using bolts M10x100mm pos. 9 (bolts put from trunk side), do it the same positioning the left bracket (pos. 4) on the left chassis member.
7. Slide the bar (pos. 1) between the supports (pos. 4 and 5) and fix it using bolts M12x35mm (pos. 10).
8. Fix body of the automat (pos. 18) and the socket plate (pos. 3) using bolts M12x25mm (pos. 8) from accessories. Place tow-ball (pos. 2) according to supplied instruction.
9. Tighten all nuts and bolts according to the torque shown in the table.
10. Reassemble the muffler (Attention!!! Left handle is welded to the support pos. 5).
11. Connect the electric wires according to the instructions of the car.
12. Complete the paint cover of towbar (during the mounting paint cover could be destroyed).

Torque settings for nuts and bolts (8,8):		
M6 - 11 Nm	**M8 -** 25 Nm	**M10 -** 50 Nm
M12 - 87 Nm	**M14 -** 138 Nm	**M16 -** 210 Nm

NOTE

After mounting the towbar you should sign the car card at the Authorised Car Station.

The car should be equipment with:

- Indicators
- Tow mirrors

After **1000 km** of exploitation check all bolts and nuts. The ball of towbar has to be kept clear and conserve with a grease.