FITTING INSTRUCTION

Clamp mark in acc. with		Cables joining
ISO	PN	
1	L	Left directional lights
2	+	Rear fog lights
3	31	Ground
4	R	Right directional lights
5	58R	Right side parking lights
6	54	Stoplights
7	58L	Left side parking lights

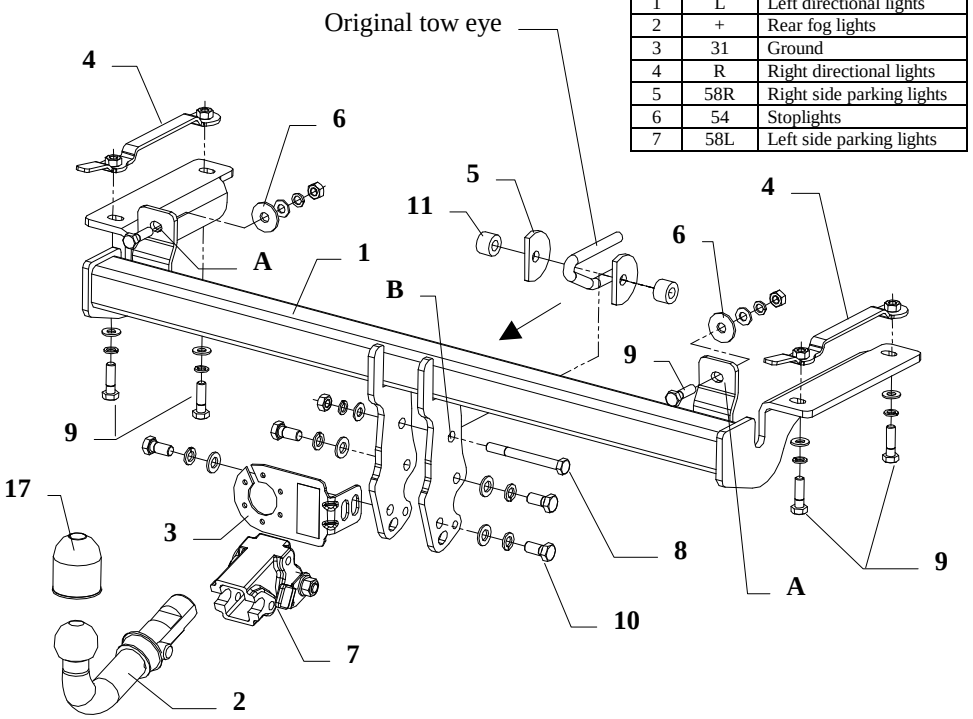

This towing hitch is designed to assembly in following cars:
HONDA HR-V 3 door, produced since 1999 till 05.2002 and **HONDA HR-V 5 door,** produced since 1999 till 05.2002, catalogue number **Y23A** and is prepared to tow trailers max total weight **1400 kg** and max vertical load **70 kg**.

The towing hitch should be install in points described by a car producer.

The instruction of the assembly

1. Disassemble the rear bumper and plastic cover below the car.
2. Untwist metal fenders from rear slice.
3. In rear slice make elongated holes according to figure 2.
4. To made holes put jibs with nuts (pos. 4).
5. To chassis members put main bar of the towing hitch (pos. 1) and fix by bolts M10x35mm (pos. 9) with jibs.
6. Through holes (pos. A) and holes in rear slice twist bolts M10x35mm (pos. 9) using big washers (pos. 6).

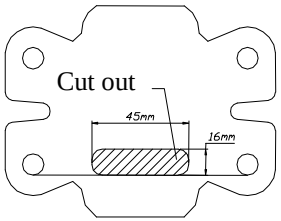

Fig. 2

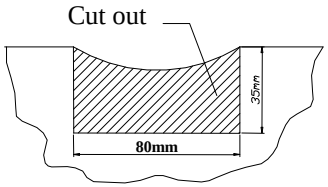

Fig. 3

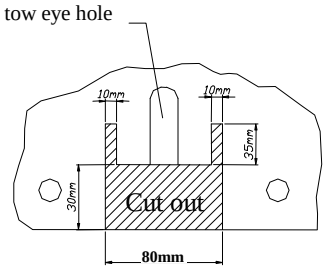

Fig. 4

7. Reinstall untwisted fenders and the bumper after cut his fragment as shown figure 3.
8. Reinstall plastic cover after cut her fragment as shown figure 4.
9. Through hole (pos. B) and original tow eye twist on bolt M10x100mm using special scathing washers (pos. 5).
10. Fix body of the automat (pos. 7) and the socket plate (pos. 3) using bolts M12x25mm (pos. 10) from accessories. Place tow-ball (pos. 2) according to supplied instruction.
11. Tighten all bolts according to the torque shown in the table.
12. Connect electric wires of 7-poles socket according to the instruction of the car. (Recommend to make at authorized service station)
13. Complete paint layer damaged during installation.

Torque settings for nuts and bolts (8,8):

M 8	25 Nm	**M 10**	55 Nm
M 12	85 Nm	**M 14**	135 Nm

NOTE

After install the towing hitch you should get adequate note in registration book (at authorised service station).The car should be equipped with:

- Indicators
- Tow mirrors

After 1000km of exploitation check all bolts and nuts. The ball of towing hitch must be always kept clear and conserve with a grease.

Towing hitch accessories:

Pos. 1 Name: Main bar Quantity: 1 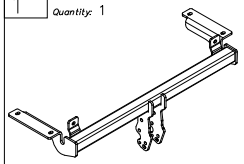	Pos. 5 Name: Distance washer Quantity: 2 	Pos. 10 Name: Bolt 8,8 B Quantity: 4 Dim. : M12x25mm 	Pos. 15 Name: Plain washer Quantity: 7 Dim. : ø 10,5 mm 
	Pos. 6 Name: Plain washer Quantity: 2 Dim. : ø35xø12x3mm 	Pos. 11 Name: Distance sleeve Quantity: 2 Dim. : ø25xø13 L=17mm 	Pos. 16 Name: Spring washer Quantity: 7 Dim. : ø 10,2 mm 
Pos. 2 Name: Tow ball Quantity: 1 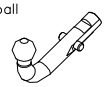	Pos. 7 Name: Body of the automat Quantity: 1 	Pos. 12 Name: Nut 8 B Quantity: 3 Dim. : M10 	Pos. 17 Name: Ball cover Quantity: 1 
Pos. 3 Name: Socket plate Quantity: 1 	Pos. 8 Name: Bolt 8,8 B Quantity: 1 Dim. : M10x100mm 	Pos. 13 Name: Plain washer Quantity: 4 Dim. : ø 13 mm 	Pos. 18 Name: Body plug Quantity: 1 
Pos. 4 Name: Jib with nu Quantity: 2 	Pos. 9 Name: Bolt 8,8 B Quantity: 6 Dim. : M10x35mm 	Pos. 14 Name: Spring washer Quantity: 4 Dim. : ø 12,2 mm 	

PPUH AUTO-HAK S.J.

Produkcja Zaczepów Kulowych
Henryk & Zbigniew Nejman
76-200 SŁUPSK ul. Słoneczna 16K
tel/fax (059) 8-414-414; 8-414-413
E-mail: office@autohak.com.pl
www. autohak.com.pl

Towing hitch (without electrical set)

Class: **A50-X** Cat. no. **Y23A**
Designed for:
Manufacturer: **HONDA**
Model: **HR-V**
3 door –produced since 1999 till 05.2002
5 door –produced since 1999 till 05.2002

Technical data:
D-value: **6,70 kN**
maximum trailer weight: **1400 kg**
maximum vertical cup load: **70 kg**

Approval number according to Directive 94/20/EC: e20*94/20*0477*00

Foreword

This towing hitch is designed according to rules of safety traffic regulations. The towing hitch is a safety component and must be installed only by qualified personnel. Any alteration or conversion to the towing hitch is prohibited and would lead to cancellation of design certification. Remove insulating compound and underseal from vehicle (if present) in the area of the matting surfaces of the towing hitch.

The vehicle manufacturer's specifications regarding trailer load and max. vertical cup load are decisive for driving, and values for the towing hitch must not be exceeded.

D-value formula:

$$\frac{\text{Max trailer weight [kg]} \times \text{Max vehicle weight [kg]}}{\text{Max trailer weight [kg]} + \text{Max vehicle weight [kg]}} \times \frac{9{,}81}{1000} = D\ [\text{kN}]$$