FITTING INSTRUCTION

Clamp mark in acc. with		Cables joining
ISO	PN	
1	L	Left directional lights
2	+	Rear fog lights
3	31	Ground
4	R	Right directional lights
5	58R	Right side parking lights
6	54	Stoplights
7	58L	Left side parking lights

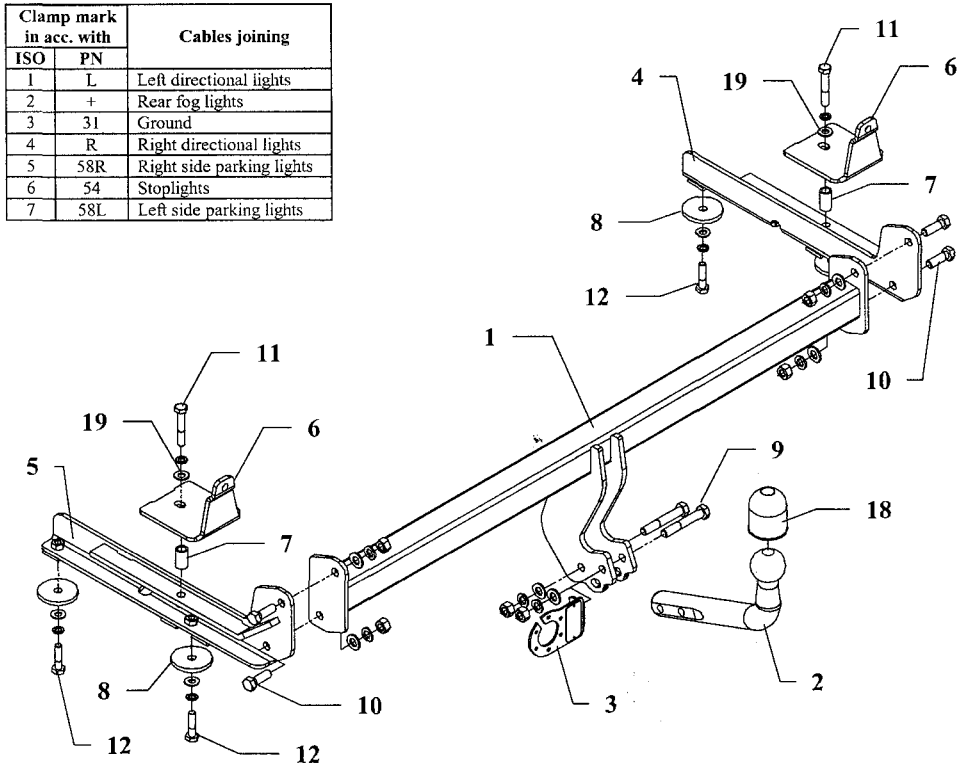

This towing hitch is designed to assembly in following car: **HONDA ACCORD, 4/5 doors,** produced since 1993 till 10.1998, catalogue no. **Y22** and is prepared to tow trailers max total weight **1400 kg** and max vertical load **70 kg**.

From manufacturer

Thank you for buying our product. Their reliability has been confirmed in many tests. Reliability of towing hitch depends also on correct assembly and right operation. For this reasons we kindly ask to read carefully this instruction and apply to hints.

The towing hitch should be install in points described by a car producer.

The instruction of the assembly

1. To install this towing hitch you have to disassemble a bumper.
2. From boot take out carpet, unscrew plastic cover of rear part and pull side upholstery.
3. From below the car in chassis members are holes blind with plastic plugs – pull out this plugs.
4. To chassis members slip side brackets (pos. 4 and 5) and loosely fix it as shown in drawing.
5. Inside boot remove plastic plug, slide distance sleeves (pos. 7), put elements pos. 6 and fix as shown in drawing.
6. Between installed brackets pos. 4 and 5 insert main bar of towing hitch pos. 1 and fix using bolts M12x35mm (pos. 10).
7. Cut fragment of bumper (use template).
8. After cut, install bumper to a car.
9. Fix tow-ball (pos. 2) and socket plate (pos. 3) using bolts M12x75mm (pos. 9) from equipment.
10. Tighten all bolts according to the torque shown in the table.
11. Connect electric wires of 7-bolts socket according to the instruction of the car. (Recommend to make at authorized service station)
12. Complete the paint coating damaged during installation.

Torque settings for nuts and bolts (8,8):		
M6 - 11 Nm	**M8** - 25 Nm	**M10** - 50 Nm
M12 - 87 Nm	**M14** - 138 Nm	**M16** - 210 Nm

NOTE

After install the towing hitch you should get adequate note in registration book (at authorised service station).The car should be equipped with:

- Indicators
- Tow mirrors

After 1000km of exploitation check all bolts and nuts. The ball of towing hitch must be always kept clear and conserve with a grease.

Towing hitch equipment:

Pos. 1 Name: Main bar Quantity: 1 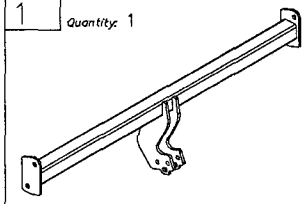	Pos. 6 Name: Bend fish-plate Quantity: 2 	Pos. 13 Name: Nut 8 B Quantity: 6 Dim. : M12 
	Pos. 7 Name: Distance sleeve Quantity: 2 Dim. : ø25x2,35mm L=30mm 	Pos. 14 Name: Plain washer Quantity: 6 Dim. : ø 13 mm 
Pos. 2 Name: Taw ball Quantity: 1 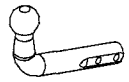	Pos. 8 Name: Washer Quantity: 4 Dim. : ø58xø12x6mm 	Pos. 15 Name: Plain washer Quantity: 4 Dim. : ø 10,5 mm 
Pos. 3 Name: Socket plate Quantity: 1 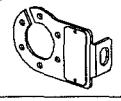	Pos. 9 Name: Bolt 8,8 B Quantity: 2 Dim. : M12x75mm 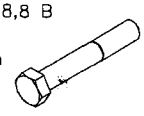	Pos. 16 Name: Spring washer Quantity: 6 Dim. : ø 12,2 mm 
Pos. 4 Name: Right bracket Quantity: 1 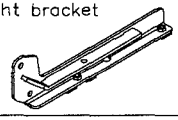	Pos. 10 Name: Bolt 8,8 B Quantity: 4 Dim. : M12x35mm 	Pos. 17 Name: Spring washer Quantity: 6 Dim. : ø 10,2 mm 
Pos. 5 Name: Left bracket Quantity: 1 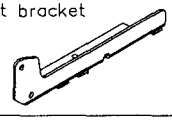	Pos. 11 Name: Bolt 8,8 B Quantity: 2 Dim. : M10x60mm 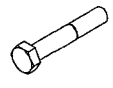	Pos. 18 Name: Ball cover Quantity: 1 
	Pos. 12 Name: Bolt 8,8 B Quantity: 4 Dim. : M10x40mm 	Pos. 19 Name: Washer Quantity: 2 Dim. : ø30xø10.5x2.5mm 

PPUH AUTO-HAK S.J.

Produkcja Zaczepów Kulowych
Henryk & Zbigniew Nejman
76-200 SŁUPSK ul. Słoneczna 16K
tel/fax (059) 8-414-414; 8-414-413
E-mail: office@autohak.com.pl
www. autohak.com.pl

Towing hitch (without electrical set)

Class: **A50-X** Cat. no. **Y22**
Designed for:
Manufacturer: **HONDA**
Model: **ACCORD**
Type: **4/5 doors**
produced since 1993 till 10.1998

Technical data:
D-value: **7,91 kN**
maximum trailer weight: **1400 kg**
maximum vertical cup load: **70 kg**

Approval number acc. to regulations EKG/ONZ 55.01: E20-55R-01 1131

Foreword

This towing hitch is designed according to rules of safety traffic regulations. The towing hitch is a safety component and can be install only by qualified personnel. Any alteration or conversion of the towing hitch is prohibited and would lead to cancellation of design certification. Remove insulating compound and underseal from vehicle (if present) in the area of the matting surfaces of the towing hitch.
The vehicle manufacturer's specifications regarding trailer load and max. vertical cup load are decisive for driving, and values for the towing hitch cannot be exceeded.
D-value formula:

$$\frac{\text{Max trailer weight [kg]} \times \text{Max vehicle weight [kg]}}{\text{Max trailer weight [kg]} + \text{Max vehicle weight [kg]}} \times \frac{9{,}81}{1000} = D\ [\text{kN}]$$

76-200 Słupsk. Ul Słoneczna 16 K

Template for towbar cat. no. Y22
designed to install in car:
HONDA ACCORD 4-5 doors
produced since 1993 till 1998

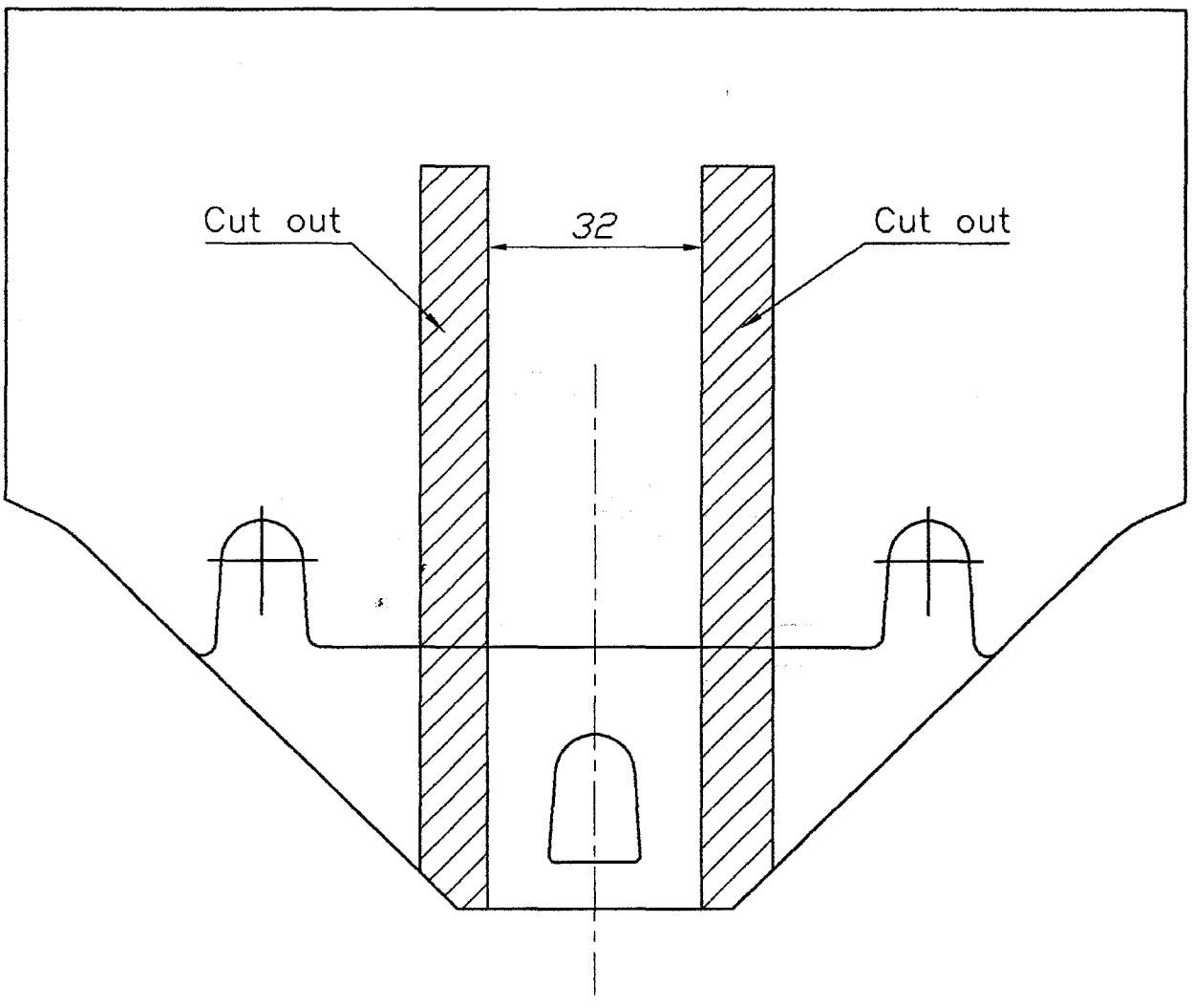

Wszystkie prawa zastrzeżone (łącznie z tłumaczeniem na języki obce). Żaden fragment niniejszej dokumentacji nie może być wykorzystany w jakiejkolwiek formie-fotokopii, mikrofilmu czy innej reprodukcji-bez pisemnej zgody firmy Auto Hak.