FITTING INSTRCUTION

Clamp mark in acc. with		Cables joining
ISO	PN	
1	L	Left directional lights
2	+	Rear fog lights
3	31	Ground
4	R	Right directional lights
5	58R	Right side parking lights
6	54	Stoplights
7	58L	Left side parking lights

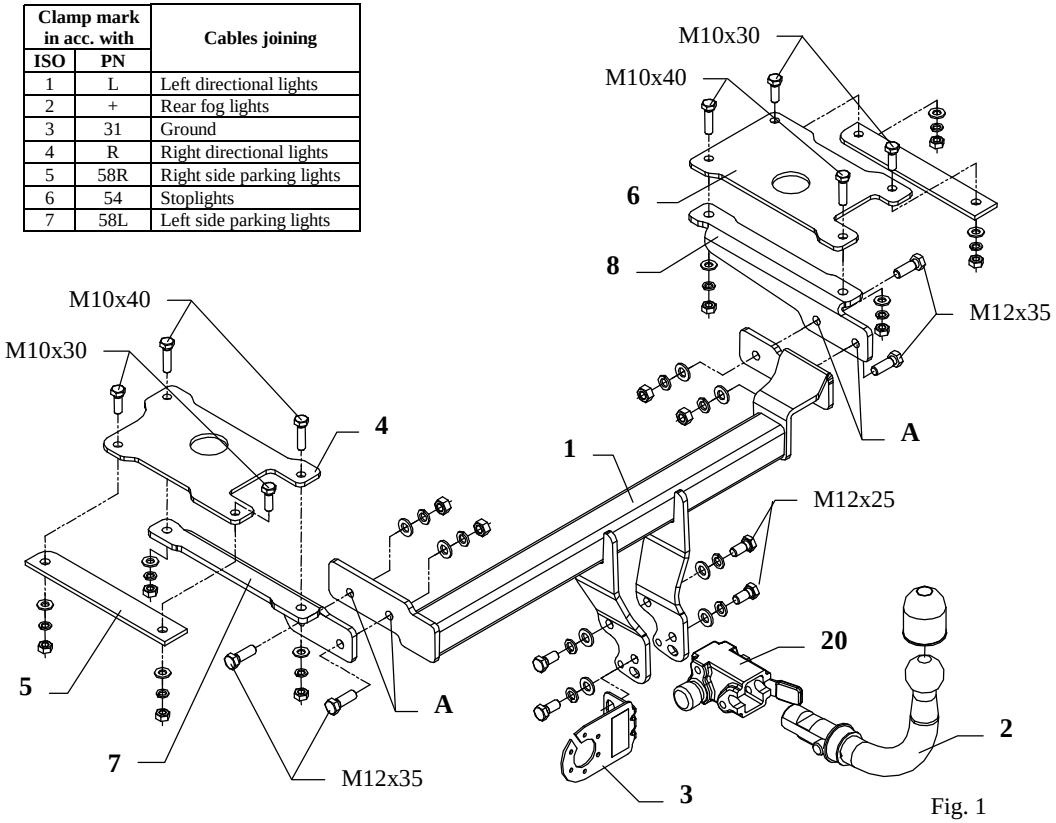

Fig. 1

This towing hitch is designed to assembly in following cars: **HONDA CIVIC, 3 doors,** produced since 1991 till 1995 and since 1996 till 2000, catalogue no. **Y07A** and is prepared to tow trailers max total weight **1200 kg** and max vertical load **50 kg**.

From manufacturer

Thank you for buying our product. Their reliability has been confirmed in many tests. Reliability of towing hitch depends also on correct assembly and right operation. For this reasons we kindly ask to read carefully this instruction and apply to hints.

The towing hitch should be install in points described by a car producer.

The instruction of the assembly

1. For the purpose of installing of the towing hitch one ought to disassemble the bumper. **Attention!** In models, where comes up the metal fulfilment of the bumper, one ought to dismount it (not used anymore).
2. Disassemble covers of sides from left and right side of the trunk and the back piece.

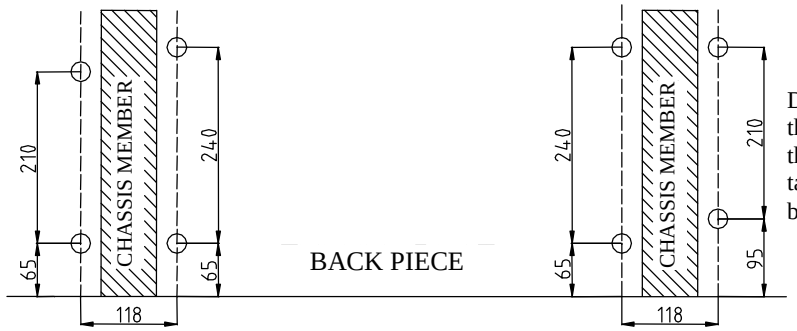

Drawing from the bottom of the car (after take off the bumper)

Fig. 2

3. Point out holes from the bottom of the car according to the fig. 2 (above). Then drill holes ø11mm (drillings fall out in places of the pressure welding of chassis members with the floor of the car) – make carefully and precisely.
4. Apply properly large fish-plates (pos. 4 and 6) onto made holes (inside the trunk).
5. Apply side brackets (pos. 7 and 8) from the bottom of the car and through large fish-plates (pos. 4 and 6) fix properly with bolts M10x40mm – pos. 11 (see fig. 1).
6. Apply fish-plates (pos. 5) from the bottom of the car and through large fish-plates (pos. 4 and 6) fix properly with bolts M10x30mm – pos. 12 (see fig. 1).
7. To side brackets through holes (pos. A) fix the main bar of the towing hitch (pos. 1) using bolts M12x35mm (pos. 10).
8. Tighten all bolts according to the torque shown in the table.
9. Instal the bumper and internal covers of the trunk.
10. To so prepared towing hitch fix body of the automat (pos. 20) and the socket plate (pos. 3) using bolts M12x25mm (pos. 9) from accessories. Place tow-ball (pos. 2) according to supplied instruction.
11. Connect electric wires of 7-poles socket according to the instruction of the car. (Recommend to make at authorized service station).
12. Complete paint layer damaged during installation.

Torque settings for nuts and bolts (8,8):	
M 8 - 25 Nm	**M 10 -** 55 Nm
M 12 - 85 Nm	**M 14 -** 135 Nm

NOTE

After install the towing hitch you should get adequate note in registration book (at authorised service station).The car should be equipped with:

- Indicators
- Tow mirrors

After 1000km check all bolts and nuts. The ball of towing hitch must be always kept clear and conserve with a grease.

Towing hitch accessories:

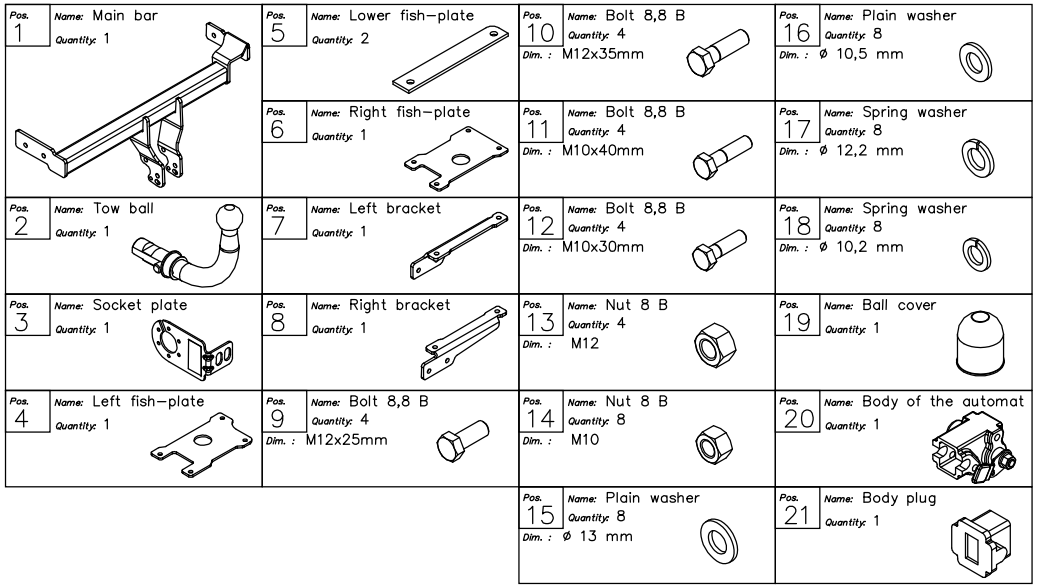

PPUH AUTO-HAK S.J.

Produkcja Haków Holowniczych
Henryk & Zbigniew Nejman
76-200 SŁUPSK ul. Słoneczna 16K
tel/fax (059) 8-414-414; 8-414-413
E-mail: office@autohak.com.pl
www. autohak.com.pl

Towing hitch (without electrical set)

Class: **A50-X** Cat. no. **Y07A**
Designed for:
Manufacturer: **HONDA**
Model: **CIVIC**
Type: **3 doors**
produced since 1991 till 1995
and since 1996 till 2000

Technical data:
D-value: **6,01 kN**
maximum trailer weight: **1200 kg**
maximum vertical cup load: **50 kg**

Approval number according to Directive 94/20/EC: e20*94/20*0370*00

Foreword

This towing hitch is designed according to rules of safety traffic regulations. The towing hitch is a safety component and can be install only by qualified personnel. Any alteration or conversion of the towing hitch is prohibited and would lead to cancellation of design certification. Remove insulating compound and underseal from vehicle (if present) in the area of the matting surfaces of the towing hitch.
The vehicle manufacturer's specifications regarding trailer load and max. vertical cup load are decisive for driving whereat values for the towing hitch cannot be exceeded.
D-value formula:

$$\frac{\text{Max trailer weight [kg]} \times \text{Max vehicle weight [kg]}}{\text{Max trailer weight [kg]} + \text{Max vehicle weight [kg]}} \times \frac{9{,}81}{1000} = D\ [\text{kN}]$$