FITTING INSTRUCTION

Clamp mark in acc. with		Cables joining
ISO	PN	
1	L	Left directional lights
2	+	Rear fog lights
3	31	Ground
4	R	Right directional lights
5	58R	Right side parking lights
6	54	Stoplights
7	58L	Left side parking lights

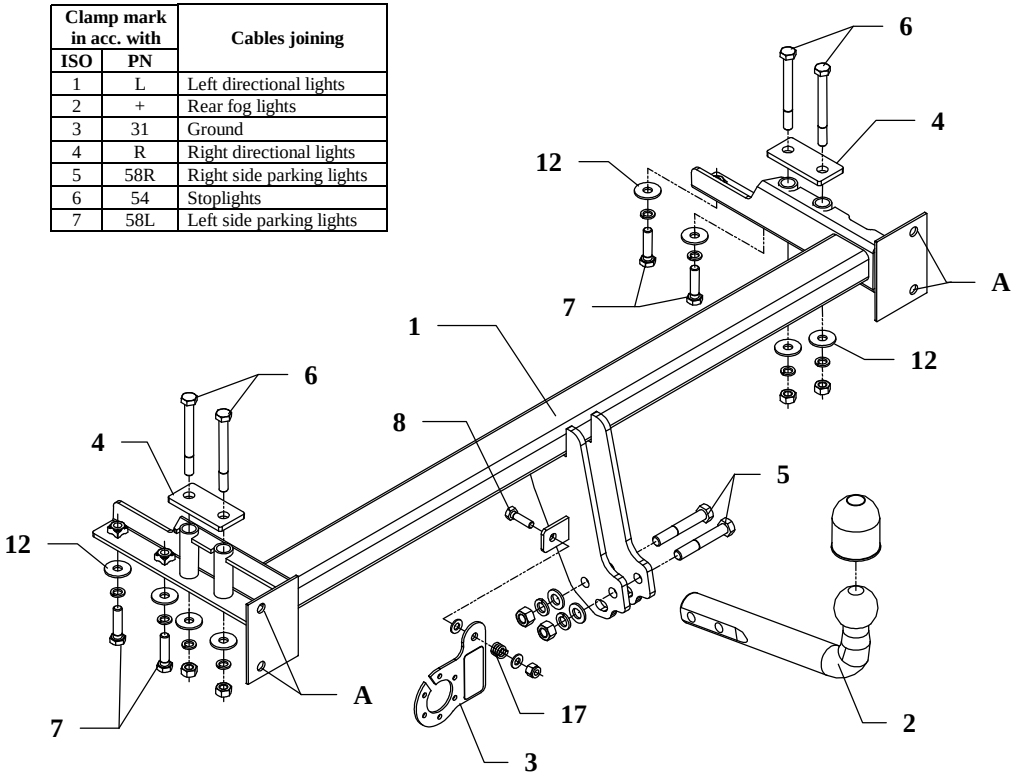

This towbar is designed to assembly in following cars:
CHEVROLET LACETTI ESTATE, produced since 2005, catalogue no. **X18** and is prepared to tow trailers max total weight **1200 kg** and max vertical load **75 kg**.

From manufacturer

Thank you for buying our product. Their reliability has been confirmed in many tests. Reliability of towbar depends also on correct assembly and correct exploitation. For this reasons we kindly ask to read carefully this instruction and apply to hints.

The towbar should be install in points described by a car producer.

The instruction of the assembly

1. Disassemble a rear bumper.
2. Unscrew reinforcement of the bumper, next unscrew fastening handles.
3. Reinforcement fix to the main bar of the towbar (pos. 1) in points pos. A.
4. Put towbar into chassis members and fix using bolts from towbar equipment – see figure.
5. Screw tow-ball (pos. 2) and socket plate (pos. 3) using bolts M12x70mm (pos. 5) from equipment
6. Tighten all bolts according to the torque shown in the table.
7. Connect electric wires of 7-poles socket according to the instruction of the car. (Recommend to make at authorized service station)
8. Complete paint layer damaged during installation.

Torque settings for nuts and bolts (8,8):

M6 - 11 Nm	**M 8** - 25 Nm	**M 10** - 50 Nm
M 12 - 87 Nm	**M 14** - 138 Nm	**M16** - 210 Nm

NOTE

After install the towbar you should get adequate note in registration book (at authorised service station).The car should be equipped with:

- Indicators
- Tow mirrors

After 1000km of exploitation check all bolts and nuts. The ball of towbar must be always kept clear and conserve with a grease.

Towbar equipment:

Pos. 1 Name: Main bar Quantity: 1 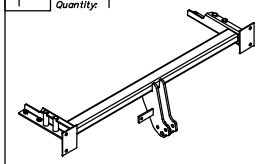	Pos. 5 Name: Bolt 8,8 B Quantity: 2 Dim. : M12x70mm 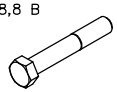	Pos. 10 Name: Nut 8 B Quantity: 4 Dim. : M10 	Pos. 15 Name: Spring washer Quantity: 2 Dim. : Ø 12,2 mm 
	Pos. 6 Name: Bolt 8,8 B Quantity: 4 Dim. : M10x100mm 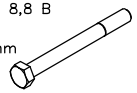	Pos. 11 Name: Nut 8 B Quantity: 1 Dim. : M8 	Pos. 16 Name: Spring washer Quantity: 8 Dim. : Ø 10,2 mm 
Pos. 2 Name: Tow ball Quantity: 1 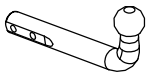	Pos. 7 Name: Bolt 8,8 B Quantity: 4 Dim. : M10x40mm 	Pos. 12 Name: Washer Quantity: 8 Dim. : Ø30xØ10.5x2.5mm 	Pos. 17 Name: Spring Quantity: 1 
Pos. 3 Name: Socket plate Quantity: 1 	Pos. 8 Name: Bolt 8,8 B Quantity: 1 Dim. : M8x30mm 	Pos. 13 Name: Plain washer Quantity: 2 Dim. : Ø 13 mm 	Pos. 18 Name: Ball cover Quantity: 1 
Pos. 4 Name: Fish–plate Quantity: 2 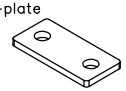	Pos. 9 Name: Nut 8 B Quantity: 2 Dim. : M12 	Pos. 14 Name: Plain washer Quantity: 2 Dim. : Ø 8,5 mm 	

PPUH AUTO-HAK S.J.

Produkcja Zaczepów Kulowych
Henryk & Zbigniew Nejman
76-200 SŁUPSK ul. Słoneczna 16K
tel/fax (059) 8-414-414; 8-414-413
E-mail: office@autohak.com.pl
www. autohak.com.pl

Towing hitch (without electrical set)

Class: **A50-X** Cat. no. **X18**
Designed for:
Manufacturer: **CHEVROLET**
Model: **LACETTI**
Type: **ESTATE**
produced since 2005

Technical data:
D-value: **6,95 kg**
maximum trailer weight: **1200 kg**
maximum vertical cup load: **75 kg**

Approval number acc. to regulations EKG/ONZ 55.01: E20-55R-01 1809

Foreword

This towbar is designed according to rules of safety traffic regulations. The towing hitch is a safety component and can be install only by qualified personnel. Any alteration or conversion of the towing hitch is prohibited and would lead to cancellation of design certification. Remove insulating compound and underseal from vehicle (if present) in the area of the matting surfaces of the towing hitch.
The vehicle manufacturer's specifications regarding trailer load and max. vertical cup load are decisive for driving, and values for the towing hitch cannot be exceeded.
D-value formula:

$$\frac{\text{Max trailer weight [kg]} \times \text{Max vehicle weight [kg]}}{\text{Max trailer weight [kg]} + \text{Max vehicle weight [kg]}} \times \frac{9{,}81}{1000} = D\ [\text{kN}]$$