FITTING INSTRUCTION

Clamp mark in acc. with		Cables joining
ISO	PN	
1	L	Left directional lights
2	+	Rear fog lights
3	31	Ground
4	R	Right directional lights
5	58R	Right side parking lights
6	54	Stoplights
7	58L	Left side parking lights

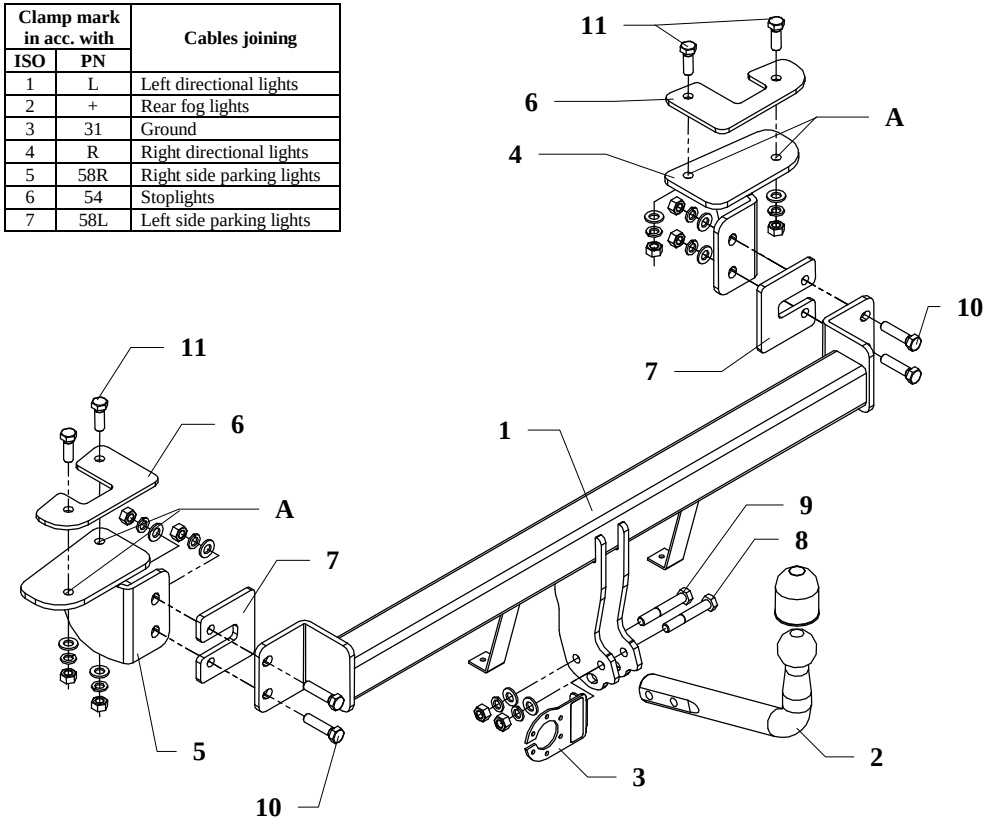

Fig.1

This towing hitch is designed to assembly in following car: **DAEWOO KALOS, 3/5 doors,** produced since 09.2002, catalogue no. **X16** and is prepared to tow trailers max total weight **1200 kg** and max vertical load **75 kg**.

From manufacturer

Thank you for buying our product. Their reliability has been confirmed in many tests. Reliability of towing hitch depends also on correct assembly and right operation. For this reasons we kindly ask to read carefully this instruction and apply to hints.

The towing hitch should be install in points described by a car producer.

The instruction of the assembly

1. Disassemble the bumper and its fulfilment (will not be used any more).
2. Remove rubber plugs in points „A”.
3. According to fig. 1 fix loosely brackets (pos. 4 and 5), use fish-plates (pos. 6).
4. To rear side of car fix the main bar of the towing hitch (pos. 1) using fish-plates (pos. 7). Fish-plates (pos. 7) should be placed between rear side of car and main bar of towing hitch.
5. Install the bumper (without filling) after its cutting – see fig. 2.

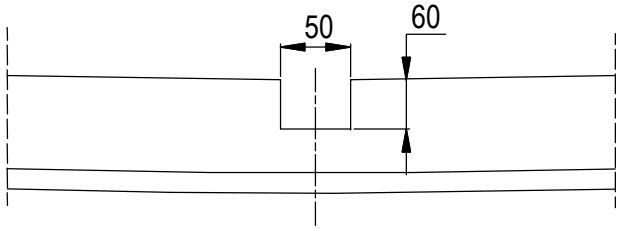

Fig. 2

6. Tighten all bolts according to the torque shown in the table.
7. Fix tow ball (pos. 2) using bolt M12x75mm (pos. 8) and M12x70mm (pos. 9). With bolt M12x75mm fix also a socket plate (pos. 3). See figure 1.
8. Connect electric wires of 7-poles socket according to the instruction of the car. (Recommend to make at authorized service station).
9. Complete paint layer damaged during installation.

Torque settings for nuts and bolts (8,8):

M 8	25 Nm	**M 10**	55 Nm
M 12	85 Nm	**M 14**	135 Nm

NOTE

After install the towing hitch you should get adequate note in registration book (at authorised service station). The car should be equipped with:

- Indicators
- Tow mirrors

After 1000km check all bolts and nuts. The ball of towing hitch must be always kept clear and conserve with a grease.

Towing hitch accessories:

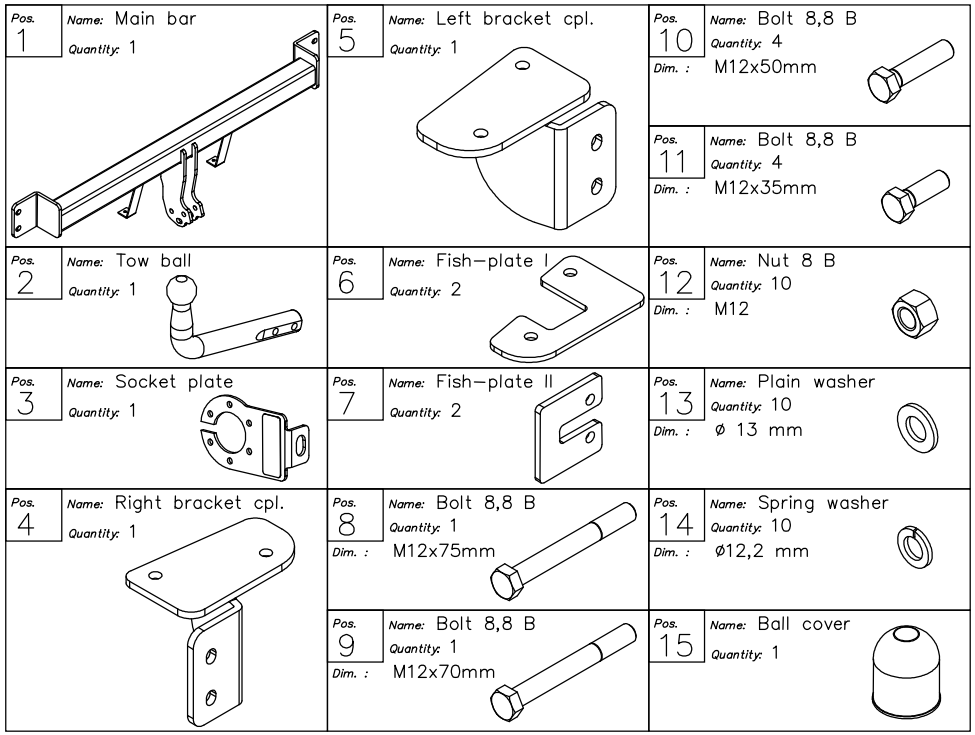

PPUH AUTO-HAK S.J.

Produkcja Haków Holowniczych
Henryk & Zbigniew Nejman
76-200 SŁUPSK ul. Słoneczna 16K
tel/fax (059) 8-414-414; 8-414-413
E-mail: office@autohak.com.pl
www. autohak.com.pl

Towing hitch (without electrical set)

Class: **A50-X** Cat. no. **X16**
Designed for:
Manufacturer: **DAEWOO**
Model: **KALOS**
Type: **3/5 doors**
produced since 09.2002

Technical data:
D-value: **6,6 kN**
maximum trailer weight: **1200 kg**
maximum vertical cup load: **75 kg**

Approval number acc. to regulations EKG/ONZ 55.01: E20-55R-01 1174

Foreword

This towing hitch is designed according to rules of safety traffic regulations. The towing hitch is a safety component and can be install only by qualified personnel. Any alteration or conversion of the towing hitch is prohibited and would lead to cancellation of design certification. Remove insulating compound and underseal from vehicle (if present) in the area of the matting surfaces of the towing hitch.
The vehicle manufacturer's specifications regarding trailer load and max. vertical cup load are decisive for driving whereat values for the towing hitch cannot be exceeded.
D-value formula:

$$\frac{\text{Max trailer weight [kg]} \times \text{Max vehicle weight [kg]}}{\text{Max trailer weight [kg]} + \text{Max vehicle weight [kg]}} \times \frac{9{,}81}{1000} = D\ [\text{kN}]$$