FITTING INSTRUCTION

Clamp mark in acc. with		Cables joining
ISO	PN	
1	L	Left directional lights
2	+	Rear fog lights
3	31	Ground
4	R	Right directional lights
5	58R	Right side parking lights
6	54	Stoplights
7	58L	Left side parking lights

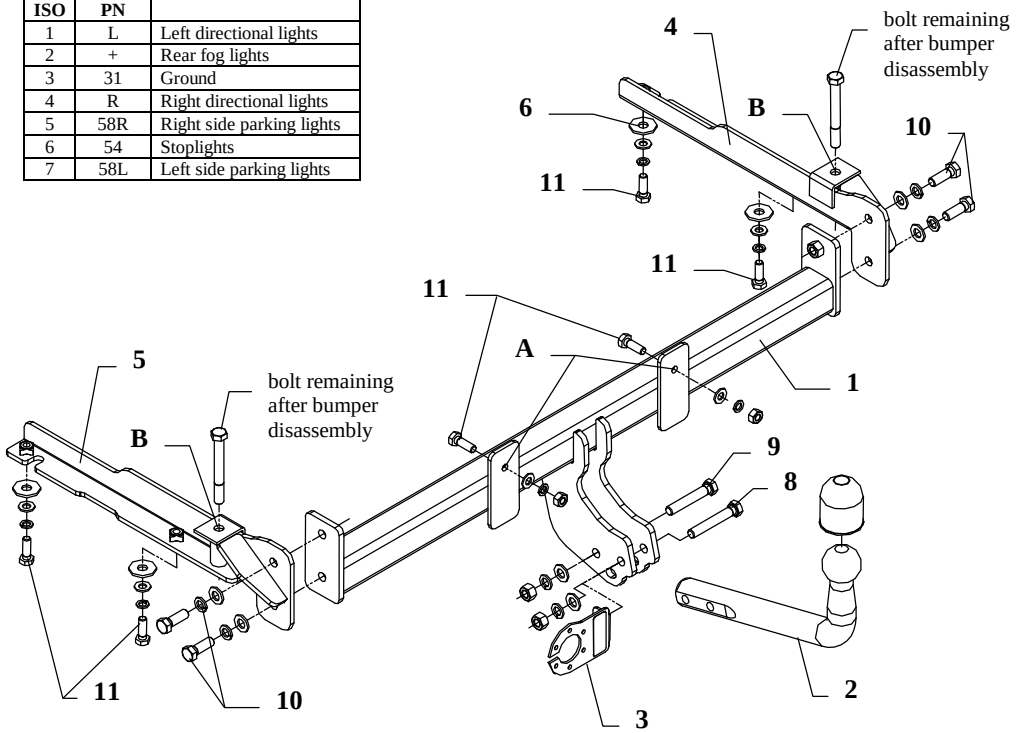

Fig. 1

This towbar is designed to assembly in following cars: **DAEWOO NUBIRA II ESTATE**, produced since 02.1998 till 2003, catalogue no. **X13** and is prepared to tow trailers max total weight **1200 kg** and max vertical load **70 kg**.

From manufacturer

Thank you for buying our product. Their reliability has been confirmed in many tests. Reliability of towbar depends also on correct assembly and right operation. For this reasons we kindly ask to read carefully this instruction and apply to hints.

The towbar should be install in points described by a car producer.

The instruction of the assembly

1. Disassemble the bumper and metal canopy. From the metal canopy one ought to separate handles, therefore one ought to drill holes ø10mm in points of the pressure welding, as showed on the fig. 2. Fix the canopy to the bumper after separating the handles.

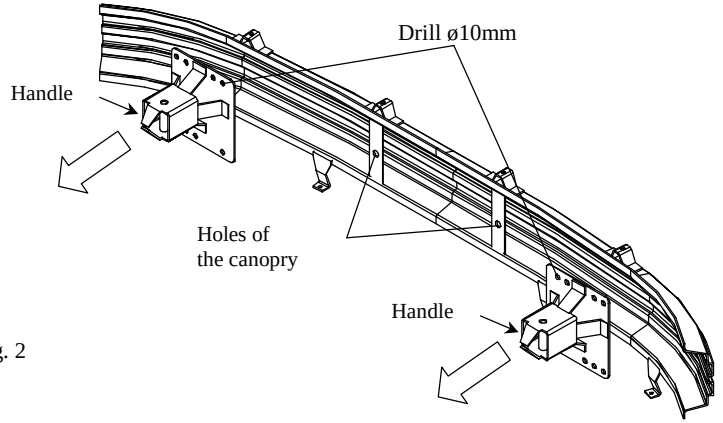

Fig. 2

2. Disassemble the filter of the activated carbon and protect against the damage.
3. Fix elements of the towbar (pos. 4 and 5) to main bar of the towbar with bolts M12x35mm – pos. 10 (loosely).
4. So prepared towbar fix to the metal canopy through holes of the towbar (pos. A) and holes of the canopy using bolts M10x30mm (pos. 11).
5. This way prepared towbar with the bumper put in to the chassis members and fix through holes (pos. B) using bolts M10x100mm remaining after bumper disassembly and bolts M10x30mm (pos. 11) from accessories. Use washers (pos. 6).
6. Previously opened filter of the activated carbon fix through two distance sleeves L=10mm (pos. 7) from towbar accessories using bolts M8x30mm (pos. 12).
7. Reassemble the bumper. Tighten all bolts.
8. Fix tow-ball (pos. 2) and socket plate (pos. 3) by bolts M12x75mm (pos. 8) and M12x70mm (pos. 9) from accessories.
9. Tighten all bolts according to the torque shown in the table.
10. Connect electric wires of 7-poles socket according to the instruction of the car. (Recommend to make at authorized service station).
11. Complete paint layer damaged during installation.

Torque settings for nuts and bolts (8,8):

M 8 - 25 Nm **M 10 -** 55 Nm

M 12 - 85 Nm **M 14 -** 135 Nm

NOTE

After install the towbar you should get adequate note in registration book (at authorised service station).The car should be equipped with:

- Indicators
- Tow mirrors

Check all bolts and nuts after 1000km of exploitation. The ball of towbar must be always kept clear and conserve with a grease.

Towbar accessories:

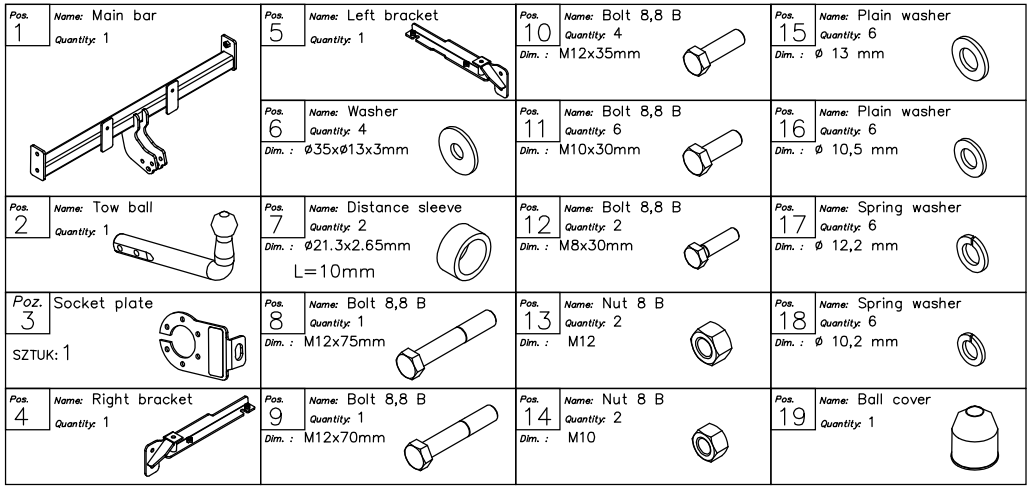

PPUH AUTO-HAK S.J.

Produkcja Zaczepów Kulowych
Henryk & Zbigniew Nejman
76-200 SŁUPSK ul. Słoneczna 16K
tel/fax (059) 8-414-414; 8-414-413
E-mail: office@autohak.com.pl
www. autohak.com.pl

Towing hitch (without electrical set)

Class: **A50-X** Cat. no. **X13**
Designed for:
Manufacturer: **DAEWOO**
Model: **NUBIRA II**
Type: **ESTATE**
produced since 02.1998 till 2003

Technical data:
D-value: **7,2 kN**
maximum trailer weight: **1200 kg**
maximum vertical cup load: **70 kg**

Approval number according to Directive 94/20/EC: e20*94/20*0585*00

Foreword

This towbar is designed according to rules of safety traffic regulations. The towing hitch is a safety component and can be install only by qualified personnel. Any alteration or conversion of the towing hitch is prohibited and would lead to cancellation of design certification. Remove insulating compound and underseal from vehicle (if present) in the area of the matting surfaces of the towing hitch.
The vehicle manufacturer's specifications regarding trailer load and max. vertical cup load are decisive for driving, and values for the towing hitch cannot be exceeded.
D-value formula:

$$\frac{\text{Max trailer weight [kg]} \times \text{Max vehicle weight [kg]}}{\text{Max trailer weight [kg]} + \text{Max vehicle weight [kg]}} \times \frac{9{,}81}{1000} = D\ [\text{kN}]$$