FITTING INSTRUCTION

Clamp mark in acc. with		Cables joining
ISO	PN	
1	L	Left directional lights
2	+	Rear fog lights
3	31	Ground
4	R	Right directional lights
5	58R	Right side parking lights
6	54	Stoplights
7	58L	Left side parking lights

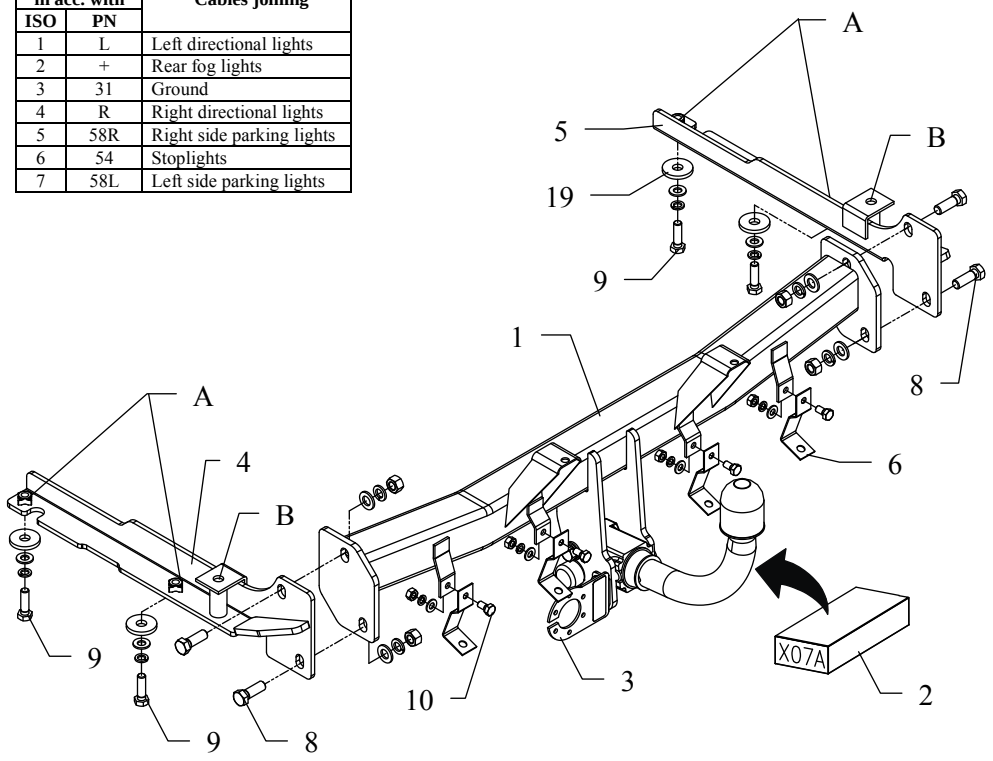

This towbar is designed to assembly in following cars: **DAEWOO NUBIRA ESTATE,** produced since 1997 till 01.1998, catalogue no. **X07A** and is prepared to tow trailers max total weight **1200 kg** and max vertical mass **70 kg**.

From manufacturer

Thank you for buying our product. Their reliability has been confirmed in many tests. Reliability of towbar depends also on correct assembly and right operation. For this reasons we kindly ask to read carefully this instruction and apply to hints.

The towbar should be installing in points described by a car producer.

The instruction of the assembly

1. For the purpose of installing of the towbar one ought to disassemble the bumper, next metal part of fastening of the bumper and soft fulfillment of the bumper (both these parts will not used any more).
2. Unscrew fuel pump from the right side of the vehicle (protect against the damage).
3. Side brackets (pos. 4 and 5) put into chassis members and screw using bolts M10x30mm (pos. 9) through the holes (pos. A) – use round washers (pos. 19) from the towbar accessories.
4. By holes (pos. B) fix using bolts M10x100mm, this bolts are from metal part of the bumper disassembly.
5. Across two sleeves L=10mm (pos. 7) from the towbar accessories screw on previously opened fuel pump.
6. To installed brackets screw the main bar of the towbar (pos. 1) by bolts M12x35mm (pos. 8).
7. To the main bar of the towbar (pos. 1) into the suitable manner screw on four handles (pos. 6) from the towbar accessories.
8. Fix bumper (use handles of the towbar).
9. Fix body of the automat and place tow-ball according to supplied instruction. Note! Remember to place socket plate (pos. 3) as shown on the drawing 1.
10. Tighten all bolts according to the torque shown in the table.
11. Connect electric wires of 7-poles socket according to the instruction of the car. (Recommend to make at authorized service station).
12. Complete paint layer damaged during installation.

Torque settings for nuts and bolts (8,8):	
M 8 - 25 Nm	**M 10 - 55** Nm
M 12 - 85 Nm	**M 14 - 135** Nm

NOTE

After install the towbar you should get adequate note in registration book (at authorised service station).The car should be equipped with:

- Indicators
- Tow mirrors

After 1000km of exploitation check all bolts and nuts. The ball of towbar must be always kept clear and conserve with a grease.

Towbar accessories:

Pos. 1 Main bar PCS.: 1 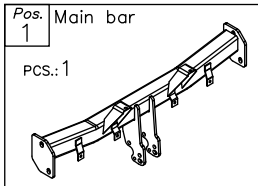	Pos. 5 Right bracket PCS.: 1 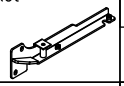	Pos. 10 Bolt 8,8 B M8x16mm PCS.: 4 	Pos. 15 Plain washer ø8mm PCS.: 4 
	Pos. 6 Handle PCS.: 4 	Pos. 11 Nut 8 B M12 PCS.: 4 	Pos. 16 Spring washer ø12mm PCS.: 4 
Pos. 2 Tow ball (mounting set) PCS.: 1 Art.no.-KL1X07A 	Pos. 7 Distance sleeve PCS.: 2 	Pos. 12 Nut 8 B M8 PCS.: 4 	Pos. 17 Spring washer ø10mm PCS.: 4 
Pos. 3 Socket plate PCS.: 1 Art.no.-BLX07A 	Pos. 8 Bolt 8,8 B M12x35 PCS.: 4 	Pos. 13 Plain washer ø12mm PCS.: 4 	Pos. 18 Spring washer ø8mm PCS.: 4
Pos. 4 Left bracket PCS.: 1 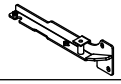	Pos. 9 Bolt 8,8 B M10x30mm PCS.: 4 	Pos. 14 Plain washer ø10mm PCS.: 4 	Pos. 19 Washer ø35xø12x3mm PCS.: 4 

PPUH AUTO-HAK S. J.

Produkcja Zaczepów Kulowych
Henryk & Zbigniew Nejman
76-200 SŁUPSK ul. Słoneczna 16K
tel/fax (059) 8-414-414; 8-414-413
E-mail: office@autohak.com.pl
www.autohak.com.pl

Towing hitch (without electrical set)

Class: **A50-X** Cat. no. **X07A**
Designed for:
Manufacturer: **DAEWOO**
Model: **NUBIRA**
Type: **ESTATE**
produced since 1997 till 01.1998

Technical data:
D-value: **7,21 kN**
maximum trailer weight: **1200 kg**
maximum vertical cup mass: **70 kg**

Approval number according to Directive 94/20/EC: e20*94/20*0637*00

Foreword

This towbar is designed according to rules of safety traffic regulations. The towing hitch is a safety component and can be install only by qualified personnel. Any alteration or conversion of the towing hitch is prohibited and would lead to cancellation of design certification. Remove insulating compound and underseal from vehicle (if present) in the area of the matting surfaces of the towing hitch.
The vehicle manufacturer's specifications regarding trailer load and max. vertical cup load are decisive for driving, and values for the towing hitch cannot be exceeded.
D-value formula:

$$\frac{\text{Max trailer weight [kg]} \times \text{Max vehicle weight [kg]}}{\text{Max trailer weight [kg]} + \text{Max vehicle weight [kg]}} \times \frac{9{,}81}{1000} = D\ [\text{kN}]$$