Towing hitch equipment:

Pos. 1 Main bar PCS.: 1 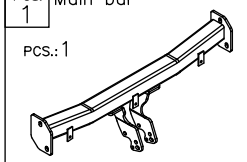	Pos. 5 Right bracket PCS.: 1 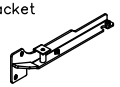	Pos. 10 Bolt 8,8 B M10x35mm PCS.: 4 	Pos. 15 Spring washer ø12mm PCS.: 4 
	Pos. 6 Side handle PCS.: 2 	Pos. 11 Bolt 8,8 B M8x16mm PCS.: 3 	Pos. 16 Spring washer ø10mm PCS.: 4 
Pos. 2 Tow ball (mounting set) PCS.: 1 Art.no.-KL1X06A 	Pos. 7 Central handle PCS.: 1 	Pos. 12 Plain washer ø12mm PCS.: 4 	Pos. 17 Spring washer ø8mm PCS.: 3 
Pos. 3 Socket plate PCS.: 1 Art.no.-BLX06A 	Pos. 8 Distance sleeve PCS.: 2 	Pos. 13 Plain washer ø10mm PCS.: 4 	Pos. 18 Nut 8 B M12 PCS.: 4 
Pos. 4 Left bracket PCS.: 1 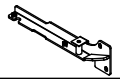	Pos. 9 Bolt 8,8 B M12x35 PCS.: 4 	Pos. 14 Plain washer ø8mm PCS.: 3 	Pos. 19 Nut 8 B M8 PCS.: 3 
			Pos. 20 Washer ø35xø12x3mm PCS.: 4 

PPUH AUTO-HAK S.J.

Produkcja Zaczepów Kulowych
Henryk & Zbigniew Nejman
76-200 SŁUPSK ul. Słoneczna 16K
tel/fax (059) 8-414-414; 8-414-413
E-mail: office@autohak.com.pl
www. autohak.com.pl

Towing hitch (without electrical set)

Class: **A50-X** Cat. no. **X06A**
Designed for:
Manufacturer: **DAEWOO**
Model: **NUBIRA**
Type: **4 doors**
produced since 1997 till 06.1999

Technical data:
D-value: **7,00 kg**
maximum trailer weight: **1200 kg**
maximum vertical cup load: **70 kg**

Approval number according to Directive 94/20/EC: e20*94/20*0593*00

Foreword

This towing hitch is designed according to rules of safety traffic regulations. The towing hitch is a safety component and can be install only by qualified personnel. Any alteration or conversion of the towing hitch is prohibited and would lead to cancellation of design certification. Remove insulating compound and underseal from vehicle (if present) in the area of the matting surfaces of the towing hitch.
The vehicle manufacturer's specifications regarding trailer load and max. vertical cup load are decisive for driving, and values for the towing hitch cannot be exceeded.
D-value formula:

$$\frac{\text{Max trailer weight [kg]} \times \text{Max vehicle weight [kg]}}{\text{Max trailer weight [kg]} + \text{Max vehicle weight [kg]}} \times \frac{9{,}81}{1000} = D\ [\text{kN}]$$

FITTING INSTRUCTION

Clamp mark in acc. with		Cables joining
ISO	PN	
1	L	Left directional lights
2	+	Rear fog lights
3	31	Ground
4	R	Right directional lights
5	58R	Right side parking lights
6	54	Stoplights
7	58L	Left side parking lights

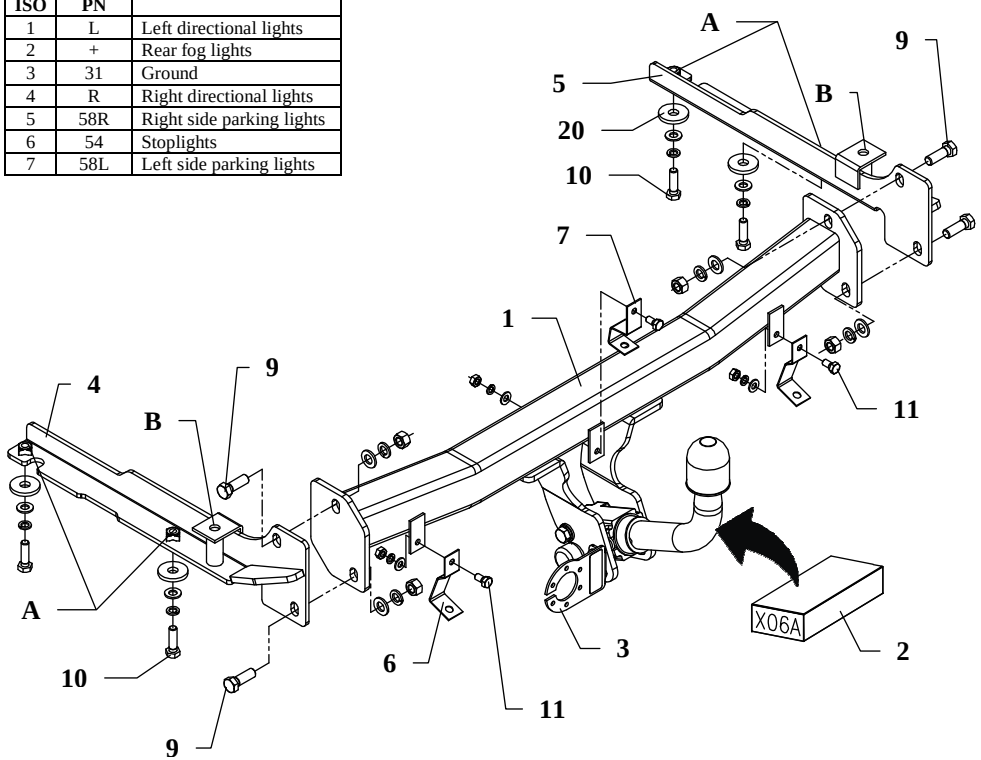

This towing hitch is designed to assembly in following cars: **DAEWOO NUBIRA, 4 door,** produced since 1997 till 06.1999, catalogue no. **X06A** and is prepared to tow trailers max total weight **1200 kg** and max vertical load **70 kg.**

From manufacturer

Thank you for buying our product. Their reliability has been confirmed in many tests. Reliability of towing hitch depends also on correct assembly and correct exploitation. For this reasons we kindly ask to read carefully this instruction and apply to hints.

The towing hitch should be install in points described by a car producer.

The instruction of the assembly

1. To install this towing hitch, make following actions: disassemble a rear bumper, metal bowl of bumper fastener and soft filling of the bumper (both parts not used any more).
2. Unscrew petrol pump on the right side of the car (screen with the damage).
3. Put side brackets (pos. 4 and 5) in chassis members and fix by bolts M10x35mm (pos. 10) through holes A (use big washer (pos. 20)).
4. Through holes B fix bolts M10x100mm (from metal bowl).
5. Through two sleeves L=10mm (pos. 8) fix the petrol pump.
6. Put main bar of the towing hitch (pos. 1) between mounted side brackets and fix it using bolts M12x35mm (pos. 9).
7. To main bar of the towing hitch (pos. 1) fix properly three handles (pos. 6 and 7) from equipment.
8. Fix body of the automat and place tow-ball according to supplied instruction. Note! Remember to place socket plate (pos. 3) as shown on the drawing 1.
9. Tighten all bolts according to the torque shown in the table.
10. Connect electric wires of 7-bolts socket according to the instruction of the car. (Recommend to make at authorized service station)
11. Complete paint layer damaged during installation.

Torque settings for nuts and bolts (8,8):

M 8	25 Nm	**M 10**	55 Nm
M 12	85 Nm	**M 14**	135 Nm

NOTE

After install the towing hitch you should get adequate note in registration book (at authorised service station).The car should be equipped with:

- Indicators
- Tow mirrors

After 1000km of exploitation check all bolts and nuts. The ball of towing hitch must be always kept clear and conserve with a grease.