Towbar accessories:

| | | | |
|---|---|---|---|
| Pos. 1 Main bar<br>PCS.: 1 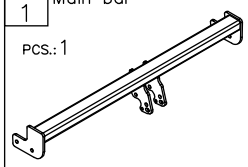 | Pos. 4 Left bracket<br>PCS.: 1  | Pos. 8 Bolt 8,8 B M12x35mm<br>PCS.: 4  | Pos. 14 Plain washer ø13mm<br>PCS.: 4  |
| | Pos. 5 Right bracket<br>PCS.: 1 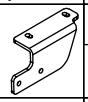 | Pos. 9 Bolt 8,8 B M10x100mm<br>PCS.: 4 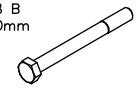 | Pos. 15 Plain washer ø10,5mm<br>PCS.: 4  |
| Pos. 2 Tow ball (mounting set)<br>PCS.: 1 <br>Art.no.-KL1X02A | Pos. 6 Distance sleeve ø17.2x2.35mm L=58mm<br>PCS: 4  | Pos. 12 Nut 8 B M12<br>PCS.: 4  | Pos. 16 Spring washer ø12,2mm<br>PCS.: 4  |
| Pos. 3 Socket plate<br>PCS.: 1 <br>Art.no.-BL1X02A | Pos. 7 Fish–plate 185x50x8mm<br>PCS.: 2 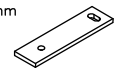 | Pos. 13 Nut 8 B M10<br>PCS.: 4  | Pos. 17 Spring washer ø10,2mm<br>PCS.: 4  |
| | | | Pos. 18 Ball cover<br>PCS.: 1  |


**PPUH AUTO-HAK Sp.J.**

Produkcja Zaczepów Kulowych
Henryk & Zbigniew Nejman
76-200 SŁUPSK ul. Słoneczna 16K
tel/fax (059) 8-414-414; 8-414-413
E-mail: office@autohak.com.pl
www. autohak.com.pl


# Towing hitch (without electrical set)

Class: **A50-X** Cat. no. **X02A**
Designed for:
Manufacturer: **DAEWOO**
Model: **NEXIA**
Type: **3-5 door**
produced since 1995 till 1997

Technical data:
**D**-value: **6,8 kN**
maximum trailer weight: **1200 kg**
maximum vertical cup load: **70 kg**

**Approval number according to Directive 94/20/EC: e20*94/20*0584*00**

## *Foreword*

This towbar is designed according to rules of safety traffic regulations. The towing hitch is a safety component and can be install only by qualified personnel. Any alteration or conversion of the towing hitch is prohibited and would lead to cancellation of design certification. Remove insulating compound and underseal from vehicle (if present) in the area of the matting surfaces of the towing hitch.
The vehicle manufacturer's specifications regarding trailer load and max. vertical cup load are decisive for driving whereat values for the towing hitch cannot be exceeded.
*D-value formula:*

$$\frac{\text{Max trailer weight [kg]} \times \text{Max vehicle weight [kg]}}{\text{Max trailer weight [kg]} + \text{Max vehicle weight [kg]}} \times \frac{9{,}81}{1000} = D\ [\text{kN}]$$

# FITTING INSTRCUTION

| Clamp mark in acc. with | | Cables joining |
|---|---|---|
| ISO | PN | |
| 1 | L | Left directional lights |
| 2 | + | Rear fog lights |
| 3 | 31 | Ground |
| 4 | R | Right directional lights |
| 5 | 58R | Right side parking lights |
| 6 | 54 | Stoplights |
| 7 | 58L | Left side parking lights |

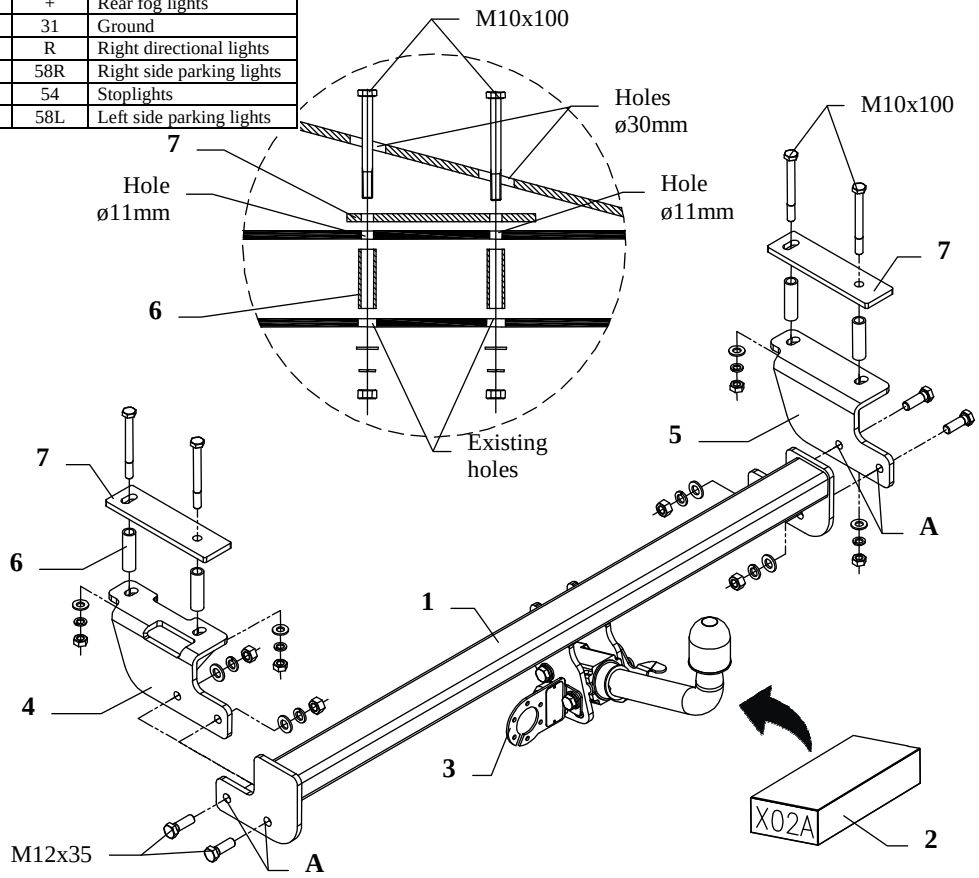


This towbar is designed to assembly in following cars: **DAEWOO NEXIA, 3-5 door,** produced since 1995 till 1997, catalogue no. **X02A** and is prepared to tow trailers max total weight **1200 kg** and max vertical load **70 kg**.

### *From manufacturer*

Thank you for buying our product. Their reliability has been confirmed in many tests. Reliability of towbar depends also on correct assembly and right operation. For this reasons we kindly ask to read carefully this instruction and apply to hints.

*The towbar should be install in points described by a car producer.*

## The instruction of the assembly

1. On the left and right side of the ribbing (inside the trunk) apply the attached template and mark points. Then make for two holes ø30mm in the ribbing.
2. In places pointed by machinery (in the head of chassis members) make holes ø11mm (see drawing) through previously made holes.
3. From the left and right side put fish-plates (pos. 7) under the ribbing (see the template).
4. From the bottom of the car into existing holes of chassis members put distance sleeves L=58mm (pos. 6), then apply brackets of the towbar (pos. 4 and 5) and fix through sleeves and fish-plates using bolts M10x100mm (pos. 9).
5. To installed brackets of towbar (pos. 4 and 5) fix the main bar of the towbar (pos. 1) through holes (pos. A) using bolts M12x35mm (pos. 8).
6. Fix body of the automat and place tow-ball according to supplied instruction. Note! Remember to place socket plate (pos. 3) as shown on the drawing 1.
7. Tighten all bolts according to the torque shown in the table.
8. Connect electric wires of 7-poles socket according to the instruction of the car. (Recommend to make at authorized service station).
9. Complete paint layer damaged during installation.

| Torque settings for nuts and bolts (8,8): | |
|---|---|
| **M 8 -** 25 Nm | **M 10 -** 55 Nm |
| **M 12 -** 85 Nm | **M 14 -** 135 Nm |

## NOTE

After install the towbar you should get adequate note in registration book (at authorised service station).The car should be equipped with:

- Indicators
- Tow mirrors

After 1000km of exploitation check all bolts and nuts. The ball of towbar must be always kept clear and conserve with a grease.

PPUH AUTO–HAK Sp.J.
Henryk & Zbigniew Nejman
ul. Słoneczna 16K
76–200 SŁUPSK, POLAND
tel/fax +48 059 8–414–414;
e–mail: office@autohak.com.pl
www.autohak.com.pl

*Plattern of car*
*DAEWOO LANOS, 3-5 doors.*
*Produced since 1995 till 1997*
*Catalogue number: X02 and X02A*

