FITTING INSTRUCTION

Clamp mark in acc. with		Cables joining
ISO	PN	
1	L	Left directional lights
2	+	Rear fog lights
3	31	Ground
4	R	Right directional lights
5	58R	Right side parking lights
6	54	Stoplights
7	58L	Left side parking lights

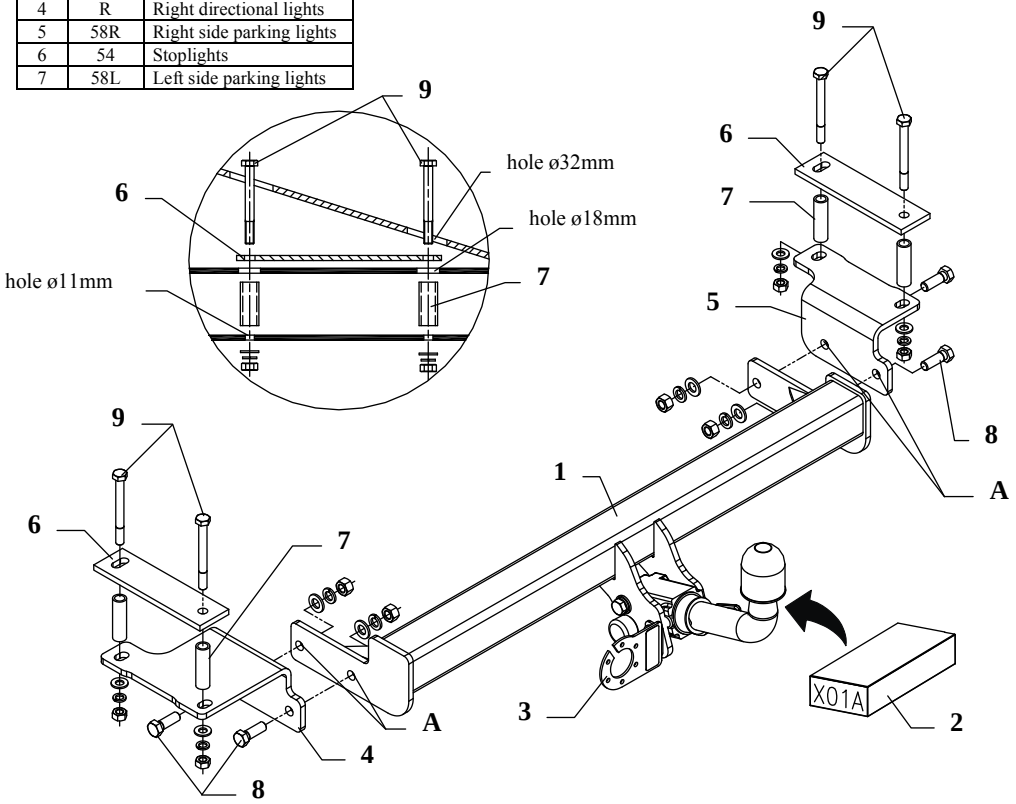

This towing hitch is designed to assembly in following cars: **DAEWOO NEXIA 4 doors**, produced since 1995 till 1997, catalogue no. **X01A** and is prepared to tow trailers max total weight **1200 kg** and max vertical load **70 kg**.

From manufacturer

Thank you for buying our product. Their reliability has been confirmed in many tests. Reliability of towing hitch depends also on correct assembly and right operation. For this reasons we kindly ask to read carefully this instruction and apply to hints.

The towing hitch should be install in points described by a car producer.

The instruction of the assembly

1. On the left and right side of the ribbing, inside the bumper, put enclosured template. Mark points, next make per two holes ø30mm in the ribbing.
2. In the upper part of the chassis members (orginal marked points) drill holes ø18mm. See the fig. 1.
3. From the inside of the trunk into made holes put distance sleeves (pos. 7). Then apply on it fish-plates (pos. 6). Put them under the ribbing.
4. From the bottom of the car – through brackets of the towing hitch (pos. 4 and 5), distance sleeves (pos. 7) and fish-plates (pos. 6) – fix towing hitch using bolts M10x100mm (pos. 10).
5. Through holes (pos. A) to installed brackets of the towing hitch (pos. 4 and 5) fix the main bar of the towing hitch (pos. 1) using bolts M12x35mm (pos. 9).
6. Fix body of the automat and place tow-ball according to supplied instruction. Note! Remember to place socket plate (pos. 3) as shown on the drawing 1.
7. Tighten all bolts according to the torque shown in the table.
8. Connect electric wires of 7-poles socket according to the instruction of the car. (Recommend to make at authorized service station).
9. Complete paint layer damaged during installation.

Torque settings for nuts and bolts (8,8):	
M 8 - 25 Nm	**M 10 -** 55 Nm
M 12 - 85 Nm	**M 14 -** 135 Nm

NOTE

After install the towing hitch you should get adequate note in registration book (at authorised service station).The car should be equipped with:

- Indicators
- Tow mirrors

After 1000km check all bolts and nuts. The ball of towing hitch must be always kept clear and conserve with a grease.

Towing hitch accessories:

Pos. 1 Main bar PCS: 1 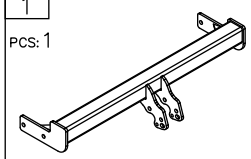	Pos. 4 Left bracket PCS: 1 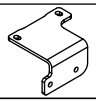	Pos. 8 Bolt 8,8 B M12x35mm PCS: 4 	Pos. 12 Plain washer ø13mm PCS: 4 
	Pos. 5 Right bracket PCS: 1 	Pos. 9 Bolt 8,8 B M10x100mm PCS: 4 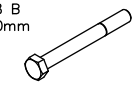	Pos. 13 Plain washer ø10,5mm PCS: 4 
Pos. 2 Tow ball (mounting set) PCS: 1 	Pos. 6 Fish–plate PCS: 2 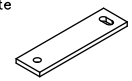	Pos. 10 Nut 8 B M12 PCS: 4 	Pos. 14 Spring washer ø12,2mm PCS: 4 
Pos. 3 Socket plate PCS: 1 	Pos. 7 Distance sleeve PCS: 4 L=60mm 	Pos. 11 Nut 8 B M10 PCS: 4 	Pos. 15 Spring washer ø10,2mm PCS: 4 

PPUH AUTO-HAK S.J.

Produkcja Haków Holowniczych
Henryk & Zbigniew Nejman
76-200 SŁUPSK ul. Słoneczna 16K
tel/fax (059) 8-414-414; 8-414-413
e-mail: office@autohak.com.pl
www. autohak.com.pl

Towing hitch (without electrical set)

Class: **A50-X** Cat. no. **X01A**
Designed for:
Manufacturer: **DAEWOO**
Model: **NEXIA**
Type: **4doors**
produced since 1995 till 1997

Technical data:
D-value: **6,82 kN**
maximum trailer weight: **1200 kg**
maximum vertical cup load: **70 kg**

Approval number according to Directive 94/20/EC: e20*94/20*0328*00

Foreword

This towing hitch is designed according to rules of safety traffic regulations. The towing hitch is a safety component and can be install only by qualified personnel. Any alteration or conversion of the towing hitch is prohibited and would lead to cancellation of design certification. Remove insulating compound and underseal from vehicle (if present) in the area of the matting surfaces of the towing hitch.
The vehicle manufacturer's specifications regarding trailer load and max. vertical cup load are decisive for driving whereat values for the towing hitch cannot be exceeded.
D-value formula:

$$\frac{\text{Max trailer weight [kg]} \times \text{Max vehicle weight [kg]}}{\text{Max trailer weight [kg]} + \text{Max vehicle weight [kg]}} \times \frac{9{,}81}{1000} = D\ [\text{kN}]$$

76–200 Słupsk. Ul Słoneczna 16 K

PPUH AUTO-HAK S. J.

Produkcja Haków Holowniczych
Henryk & Zbigniew Nejman
76-200 SŁUPSK ul. Słoneczna 16K
tel/fax (059) 8-414-414; 8-414-413
E-mail: office@autohak.com.pl
www.autohak.com.pl

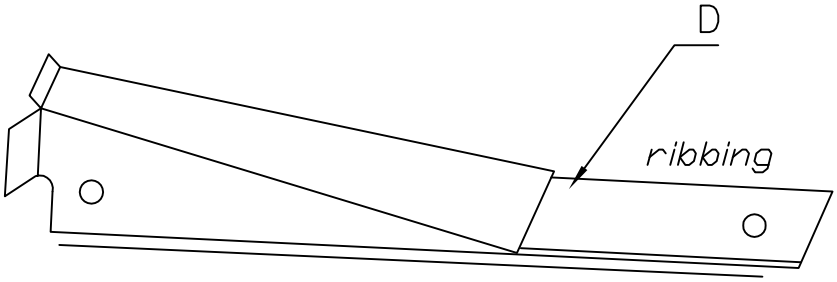

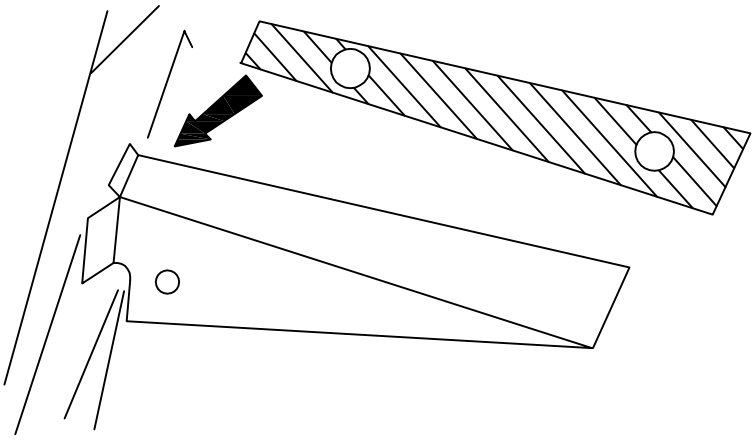

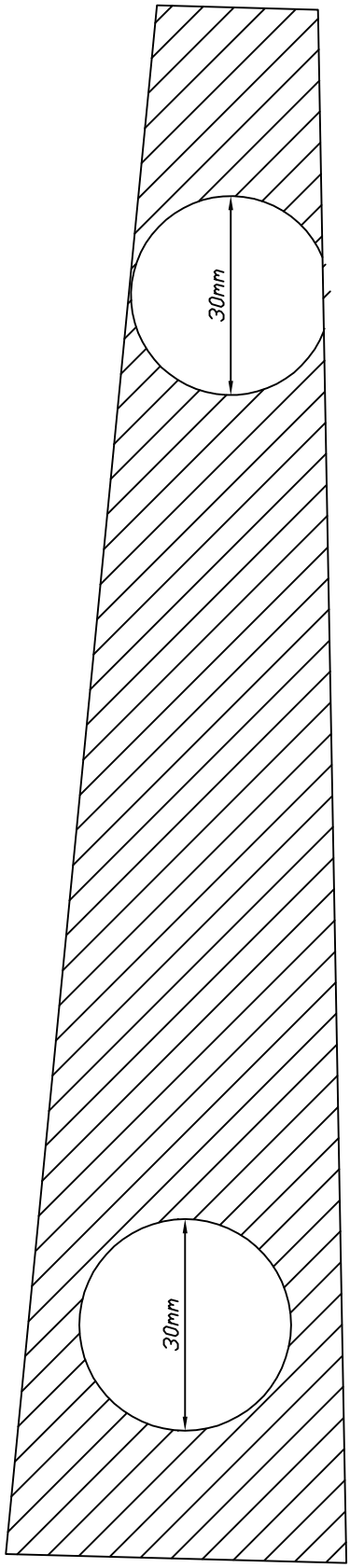

PATTERN for cutting

Model:

DAEWOO NEXIA,4 door, produced since 1995 till 1997 , catalogue no. X01A