FITTING INSTRUCTION

Clamp mark in acc. with		Cables joining
ISO	PN	
1	L	Left directional lights
2	+	Rear fog lights
3	31	Ground
4	R	Right directional lights
5	58R	Right side parking lights
6	54	Stoplights
7	58L	Left side parking lights

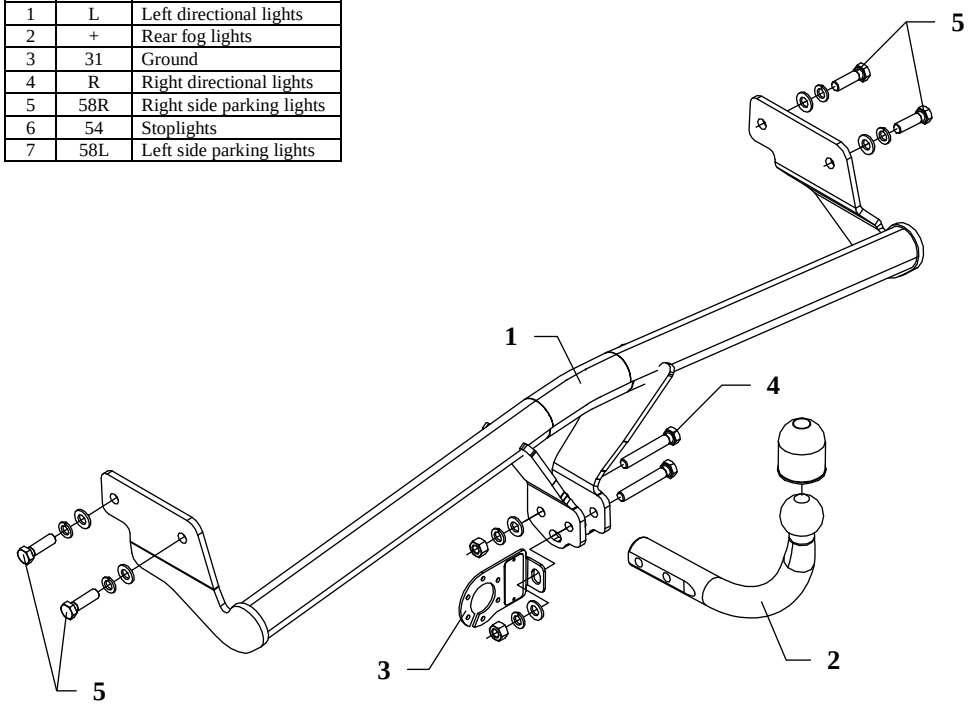

This towbar is designed to assembly in following cars: **KIA RIO, 5 doors,** produced since 09.2005 till 09.2009, catalogue no. **T50** and is prepared to tow trailers max total weight **1100 kg** and max vertical load **50 kg**.

From manufacturer

Thank you for buying our product. Their reliability has been confirmed in many tests. Reliability of towbar depends also on correct assembly and right operation. For this reasons we kindly ask to read carefully this instruction and apply to hints.

The towbar should be install in points described by a car producer.

The instruction of the assembly

1. Disassemble the bumper.
2. Apply the main bar of the towbar (pos. 1) to the chassis of the car into such way that holes of the towbar be covered with threaded holes in chassis members and fix using bolts M12x1,25x40mm (pos. 5) from the towbar accessories.
3. Install the bumper.
4. Fix tow-ball (pos. 2) with socket plate (pos. 3) using bolts M12x75mm (pos. 4) from accessories.
5. Tighten all bolts according to the torque shown in the table.
6. Connect electric wires of 7-poles socket according to the instruction of the car. (Recommend to make at authorized service station).
7. Complete paint layer damaged during installation.

Torque settings for nuts and bolts (8,8):		
M6 - 11 Nm	**M8** - 25 Nm	**M10** - 50 Nm
M12 - 87 Nm	**M14** - 138 Nm	**M16** - 210 Nm

NOTE

After install the towbar you should get adequate note in registration book (at authorised service station).The car should be equipped with:

- Indicators
- Tow mirrors

After 1000km of exploitation check all bolts and nuts. The ball of towbar must be always kept clear and conserve with a grease.

Towbar accessories:

Pos. 1 — Name: Main bar — Quantity: 1 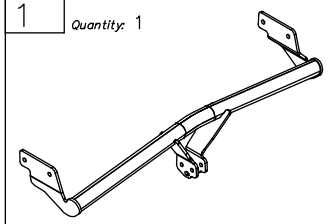	Pos. 4 — Name: Bolt 8,8 B — Quantity: 2 — Dim. : M12x75mm 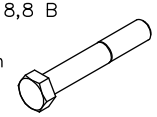	Pos. 8 — Name: Spring washer — Quantity: 6 — Dim. : ø 12,2 mm 
	Pos. 5 — Name: Bolt 8,8 B — Quantity: 4 — Dim. : M12x1.25x40mm 	Pos. 9 — Name: Ball cover — Quantity: 1 
Pos. 2 — Name: Tow ball — Quantity: 1 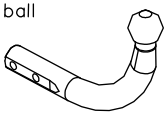	Pos. 6 — Name: Nut 8 B — Quantity: 2 — Dim. : M12 	
Pos. 3 — Name: Socket plate — Quantity: 1 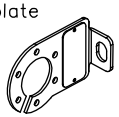	Pos. 7 — Name: Plain washer — Quantity: 6 — Dim. : ø 13 mm 	

PPUH AUTO-HAK Sp.J.

Produkcja Zaczepów Kulowych
Henryk & Zbigniew Nejman
76-200 SŁUPSK ul. Słoneczna 16K
tel/fax (059) 8-414-414; 8-414-413
E-mail: office@autohak.com.pl
www. autohak.com.pl

Towing hitch (without electrical set)

Class: **A50-X** Cat. no. **T50**
Designed for:
Manufacturer: **KIA**
Model: **RIO**
Type: **5 doors**
produced since 09.2005 till 09.2009

Technical data:
D-value: **6,4 kN**
maximum trailer weight: **1100 kg**
maximum vertical cup load: **50 kg**

Approval number according to Directive 94/20/EC: e20*94/20*0168*00

Foreword

This towbar is designed according to rules of safety traffic regulations. The towing hitch is a safety component and can be install only by qualified personnel. Any alteration or conversion of the towing hitch is prohibited and would lead to cancellation of design certification. Remove insulating compound and underseal from vehicle (if present) in the area of the matting surfaces of the towing hitch.
The vehicle manufacturer's specifications regarding trailer load and max. vertical cup load are decisive for driving whereat values for the towing hitch cannot be exceeded.
D-value formula:

$$\frac{\text{Max trailer weight [kg]} \times \text{Max vehicle weight [kg]}}{\text{Max trailer weight [kg]} + \text{Max vehicle weight [kg]}} \times \frac{9{,}81}{1000} = D\ [\text{kN}]$$