FITTING INSTRCUTION

Clamp mark in acc. with		Cables joining
ISO	PN	
1	L	Left directional lights
2	+	Rear fog lights
3	31	Ground
4	R	Right directional lights
5	58R	Right side parking lights
6	54	Stoplights
7	58L	Left side parking lights

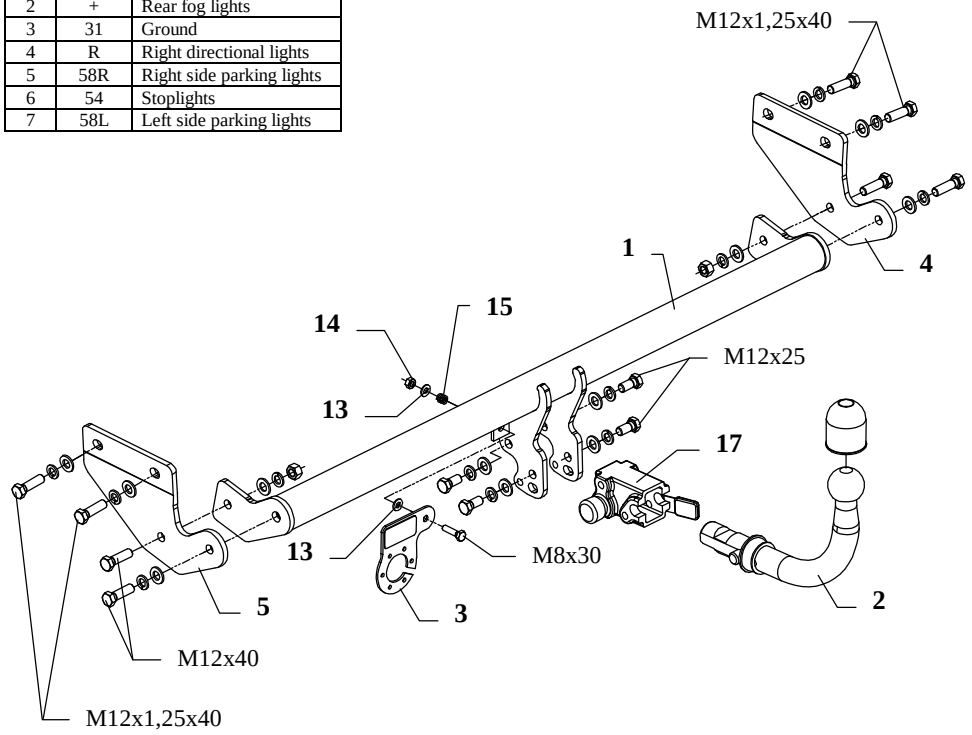

This towbar is designed to assembly in following cars: **KIA RIO, 4 doors,** produced since 2005 till 2008, catalogue no. **T48A** and is prepared to tow trailers max total weight **1100 kg** and max vertical load **50 kg**.

From manufacturer

Thank you for buying our product. Their reliability has been confirmed in many tests. Reliability of towbar depends also on correct assembly and right operation. For this reasons we kindly ask to read carefully this instruction and apply to hints.

The towbar should be install in points described by a car producer.

The instruction of the assembly

1. For the purpose of installing of the towbar it is not necessary to disassemble the bumper. However one ought to unscrew all bolts holding the bumper from the bottom.
2. By the internal side of the chassis members are factory-made holes with thread M12x1,25mm. One ought to fix to them side brackets of the towbar (pos. 4 and 5) using bolts M12x1,25x40mm (pos. 7) – loosely.
3. Slip the main bar of the towbar (pos. 1) between side brackets (pos. 4 and 5) and fix using bolts M12x40mm (pos. 8).
4. Fix body of the automat (pos. 17) using bolts M12x25mm (pos. 6) from accessories. Place tow-ball (pos. 2) according to supplied instruction.
5. Fix the socket plate (pos. 3) as shown on the fig. 1.
6. Tighten all bolts according to the torque shown in the table.
7. Connect electric wires of 7-poles socket according to the instruction of the car. (Recommend to make at authorized service station).
8. Complete paint layer damaged during installation.

Torque settings for nuts and bolts (8,8):		
M6 - 11 Nm	**M8 -** 25 Nm	**M10 -** 50 Nm
M12 - 87 Nm	**M14 -** 138 Nm	**M16** - 210 Nm

NOTE

After install the towbar you should get adequate note in registration book (at authorised service station).The car should be equipped with:

- Indicators
- Tow mirrors

After 1000km of exploitation check all bolts and nuts. The ball of towbar must be always kept clear and conserve with a grease.

Towbar accessories:

Pos. 1 Name: Main bar Quantity: 1 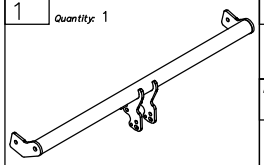	Pos. 4 Name: Right side bracket Quantity: 1 	Pos. 9 Name: Nut 8 B Quantity: 2 Dim. : M12 	Pos. 14 Name: Nut 8 B Quantity: 1 Dim. : M8 
	Pos. 5 Name: Left side bracket Quantity: 1 	Pos. 10 Name: Plain washer Quantity: 12 Dim. : Ø 13 mm 	Pos. 15 Name: Spring Quantity: 1 
Pos. 2 Name: Tow ball Quantity: 1 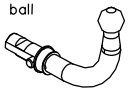	Pos. 6 Name: Bolt 8,8 B Quantity: 4 Dim. : M12x25mm 	Pos. 11 Name: Spring washer Quantity: 12 Dim. : Ø 12,2 mm 	Pos. 16 Name: Ball cover Quantity: 1 
Pos. 3 Name: Socket plate Quantity: 1 	Pos. 7 Name: Bolt 8,8 B Quantity: 4 Dim. : M12x1.25x40mm 	Pos. 12 Name: Bolt 8,8 B Quantity: 1 Dim. : M8x30mm 	Pos. 17 Name: Body of the automat Quantity: 1 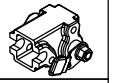
	Pos. 8 Name: Bolt 8,8 B Quantity: 4 Dim. : M12x40mm 	Pos. 13 Name: Plain washer Quantity: 2 Dim. : Ø 8,5 mm 	Pos. 18 Name: Body plug Quantity: 1 

PPUH AUTO-HAK S.J.

Produkcja Zaczepów Kulowych
Henryk & Zbigniew Nejman
76-200 SŁUPSK ul. Słoneczna 16K
tel/fax (059) 8-414-414; 8-414-413
E-mail: office@autohak.com.pl
www. autohak.com.pl

Towing hitch (without electrical set)

Class: **A50-X** Cat. no. **T48A**
Designed for:
Manufacturer: **KIA**
Model: **RIO**
Type: **4 doors**
produced since 2005 till 2008

Technical data:
D-value: **6,4 kN**
maximum trailer weight: **1100 kg**
maximum vertical cup load: **50 kg**

Approval number according to Directive 94/20/EC: e20*94/20*0069*00

Foreword

This towbar is designed according to rules of safety traffic regulations. The towing hitch is a safety component and can be install only by qualified personnel. Any alteration or conversion of the towing hitch is prohibited and would lead to cancellation of design certification. Remove insulating compound and underseal from vehicle (if present) in the area of the matting surfaces of the towing hitch.
The vehicle manufacturer's specifications regarding trailer load and max. vertical cup load are decisive for driving whereat values for the towing hitch cannot be exceeded.
D-value formula:

$$\frac{\text{Max trailer weight [kg]} \times \text{Max vehicle weight [kg]}}{\text{Max trailer weight [kg]} + \text{Max vehicle weight [kg]}} \times \frac{9{,}81}{1000} = D\ [\text{kN}]$$