FITTING INSTRUCTION

Clamp mark in acc. with		Cables joining
ISO	PN	
1	L	Left directional lights
2	+	Rear fog lights
3	31	Ground
4	R	Right directional lights
5	58R	Right side parking lights
6	54	Stoplights
7	58L	Left side parking lights

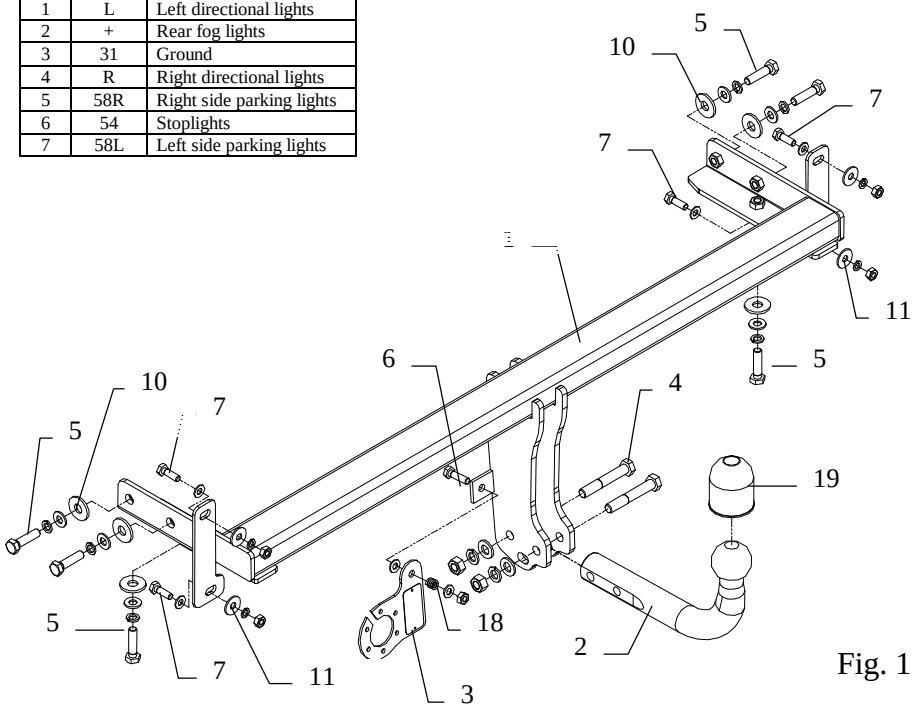

Fig. 1

This towbar is designed to assembly in following car:
KIA CERATO, catalogue no. **T47**, produced since 2004 till 2008 and is prepared to tow trailers max total weight **1450 kg** and max vertical load **56 kg**.

From manufacturer

Thank you for buying our product. Their reliability has been confirmed in many tests. Reliability of towbar depends also on correct assembly and correct exploitation. For this reasons we kindly ask to read carefully this instruction and apply to hints.

The towbar should be install in points described by a car producer.

The instruction of the assembly

1. Disassemble the rear bumper.
2. Detach reinforcement of the bumper. From reinforcement detach fasteners (not used any more) and detach small fasteners on the left side – see figure 2.

Fig. 2

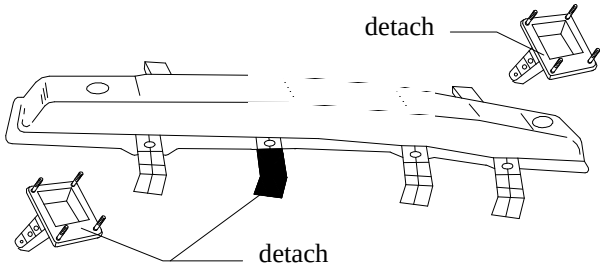

3. In the lower part of the bumper cut out fragment according to figure 3.
4. Put main bar of the towbar (pos. 1) into chassis members this way, so holes in main bar agree with holes in chassis members and fix it by bolts M10x40mm (pos. 5).
5. Reinforcement of the bumper fix to the towbar using bolts M8x25mm (pos. 7).
6. Fix the bumper together with polystyrene of the fulfillment.

Fig. 3

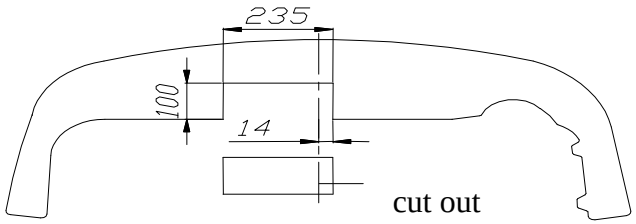

7. Screw tow-ball (pos. 2) and socket plate (pos. 3) using bolts M12x75mm (pos. 4) from accessories.
8. Tighten all bolts according to the torque shown in the table.
9. Connect electric wires of 7-poles socket according to the instruction of the car. (Recommend to make at authorized service station)
10. Complete paint layer damaged during installation.

Torque settings for nuts and bolts (8,8):

M 8	25 Nm	**M 10**	55 Nm
M 12	85 Nm	**M 14**	135 Nm

Towbar accessories:

Pos. 1 — Name: Main bar — Quantity: 1 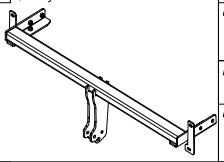	Pos. 5 — Name: Bolt 8,8 B — Quantity: 6 — Dim.: M10x40mm 	Pos. 10 — Name: Plain washer — Quantity: 6 — Dim.: ø35xø12x3mm 	Pos. 15 — Name: Spring washer — Quantity: 2 — Dim.: ø 12,2 mm 
	Pos. 6 — Name: Bolt 8,8 B — Quantity: 1 — Dim.: M8x30mm 	Pos. 11 — Name: Plain washer — Quantity: 4 — Dim.: ø25xø9x2mm 	Pos. 16 — Name: Spring washer — Quantity: 6 — Dim.: ø 10,2 mm 
Pos. 2 — Name: Tow ball — Quantity: 1 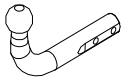	Pos. 7 — Name: Bolt 8,8 B — Quantity: 4 — Dim.: M8x25mm 	Pos. 12 — Name: Plain washer — Quantity: 2 — Dim.: ø 13 mm 	Pos. 17 — Name: Spring washer — Quantity: 4 — Dim.: ø 8,2 mm 
Pos. 3 — Name: Socket plate — Quantity: 1 	Pos. 8 — Name: Nut 8 B — Quantity: 2 — Dim.: M12 	Pos. 13 — Name: Plain washer — Quantity: 6 — Dim.: ø 10,5 mm 	Pos. 18 — Name: Spring — Quantity: 1 
Pos. 4 — Name: Bolt 8,8 B — Quantity: 2 — Dim.: M12x75mm 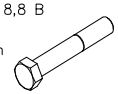	Pos. 9 — Name: Nut 8 B — Quantity: 5 — Dim.: M8 	Pos. 14 — Name: Plain washer — Quantity: 6 — Dim.: ø 8,5 mm 	Pos. 19 — Name: Ball cover — Quantity: 1 

NOTE

After install the towbar you should get adequate note in registration book (at authorised service station).The car should be equipped with:

- Indicators
- Tow mirrors

After 1000km of exploitation check all bolts and nuts. The ball of towbar must be always kept clear and conserve with a grease.

PPUH AUTO-HAK S.J.

Produkcja Zaczepów Kulowych
Henryk & Zbigniew Nejman
76-200 SŁUPSK ul. Słoneczna 16K
tel/fax (059) 8-414-414; 8-414-413
E-mail: office@autohak.com.pl
www. autohak.com.pl

Towing hitch (without electrical set)

Class: **A50-X** Cat. no. **T47**
Designed for:
Manufacturer: **KIA**
Model: **CERATO**
produced since 2004 till 2008

Technical data:
D-value: **8,0 kg**
maximum trailer weight: **1450 kg**
maximum vertical cup load: **56 kg**

Approval number acc. to regulations EKG/ONZ 55.01: E20-55R-01 1813

Foreword

This towbar is designed according to rules of safety traffic regulations. The towing hitch is a safety component and can be install only by qualified personnel. Any alteration or conversion of the towing hitch is prohibited and would lead to cancellation of design certification. Remove insulating compound and underseal from vehicle (if present) in the area of the matting surfaces of the towing hitch.
The vehicle manufacturer's specifications regarding trailer load and max. vertical cup load are decisive for driving, and values for the towing hitch cannot be exceeded.
D-value formula:

$$\frac{\text{Max trailer weight [kg]} \times \text{Max vehicle weight [kg]}}{\text{Max trailer weight [kg]} + \text{Max vehicle weight [kg]}} \times \frac{9{,}81}{1000} = D\ [kN]$$