FITTING INSTRUCTION

Clamp mark in acc. with		Cables joining
ISO	PN	
1	L	Left directional lights
2	+	Rear fog lights
3	31	Ground
4	R	Right directional lights
5	58R	Right side parking lights
6	54	Stoplights
7	58L	Left side parking lights

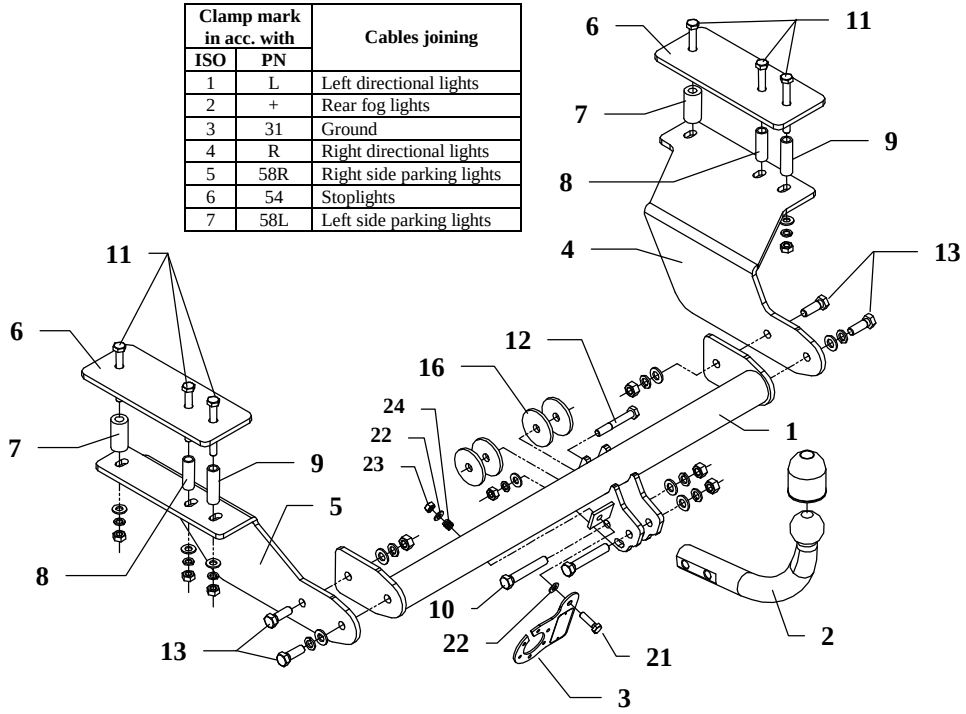

This towbar is designed to assembly in following cars: **KIA RIO, 5 doors,** produced since 2000 till 2005, catalogue no. **T39** and is prepared to tow trailers max total weight **1100 kg** and max vertical load **50 kg.**

Torque settings for nuts and bolts (8,8):			
M 8	25 Nm	**M 10**	55 Nm
M 12	85 Nm	**M 14**	135 Nm

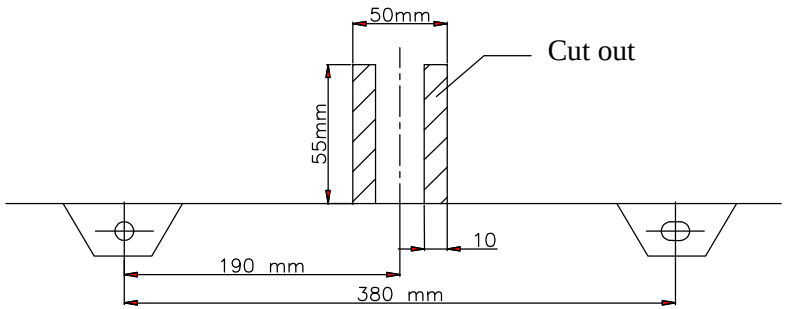

Fig. 3

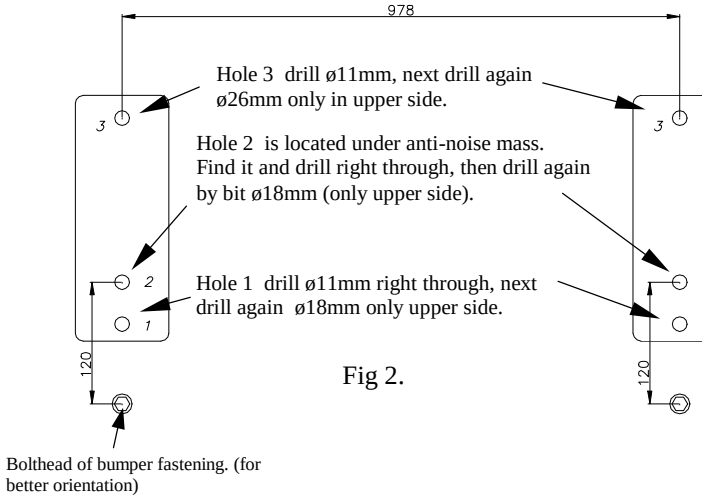

Fig 2.

The instruction of the assembly

1. Disassemble the bumper and cut out according to fig. 3.
2. In the boot, on the left and right side find original hole (are under anti-noise mass) (for help see fig. 2).
3. Place fish-plates D as show on fig. 2 (hole 2 must agree with original hole). Next drill holes 1 and 3 right through with bit ø11mm.
4. Drilled holes 1 and 2 drill again with bit ø18mm only in upper side. Hole 3 drill again with bit ø26mm, in upper side too.
5. In this way prepared holes slip distance sleeves as show on fig. 1.
6. Put fish-plates (pos.6) and slip bolts M10x90mm (pos. 11) in holes.
7. On outstanding bolts (underneath the car) put elements pos. 4 (right side) and 5 (left side), fix loosely.
8. Between side brackets 4 and 5 put main bar and fix by bolts M12x35mm (pos. 13) from accessories.
9. Through holes in ball brackets fix original tow eye using bolt M10x75mm (pos. 12), use big washers ø58xø12x5mm (pos. 16).
10. Fix tight all bolts according to the torque shown in the table.
11. Reassemble the bumper.
12. Fix tow-ball (pos. 2) using bolts M12x75mm (pos. 10) from accessories.
13. Fix the socket plate (pos. 3) as shown on the drawing.
14. Connect electric wires of 7-pole socket according to the instruction of the car. (Recommend to make at authorized service station)
15. Complete paint layer damaged during installation.

Towbar accessories:

Pos. 1 Name: Main bar Quantity: 1 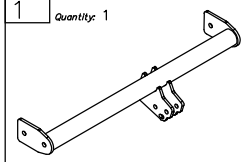	Pos. 7 Name: Distance sleeve I Quantity: 2 ø25xø13, L=49 	Pos. 14 Name: Nut 8 B Quantity: 4 Dim. : M12 	Pos. 21 Name: Bolt 8,8 B Quantity: 1 Dim. : M8x30mm 
	Pos. 8 Name: Distance sleeve II Quantity: 2 ø17,2x2,35, L=49 	Pos. 15 Name: Nut 8 B Quantity: 7 Dim. : M10 	Pos. 22 Name: Plain washer Quantity: 2 Dim. : ø 8,5 mm 
Pos. 2 Name: Tow ball Quantity: 1 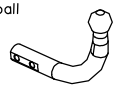	Pos. 9 Name: Distance sleeve III Quantity: 2 ø17,2x2,35, L=58 	Pos. 16 Name: Washer Quantity: 4 Dim. : ø58xø12x5mm 	Pos. 23 Name: Nut 8 B Quantity: 1 Dim. : M8 
Pos. 3 Name: Socket plate Quantity: 1 	Pos. 10 Name: Bolt 8,8 B Quantity: 2 Dim. : M12x75mm 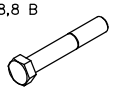	Pos. 17 Name: Plain washer Quantity: 6 Dim. : ø 13 mm 	Pos. 24 Name: Spring Quantity: 1 
Pos. 4 Name: Right bracket Quantity: 1 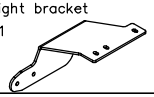	Pos. 11 Name: Bolt 8,8 B Quantity: 6 Dim. : M10x90mm 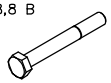	Pos. 18 Name: Plain washer Quantity: 7 Dim. : ø 10,5 mm 	Pos. 25 Name: Ball cover Quantity: 1 
Pos. 5 Name: Left bracket Quantity: 1 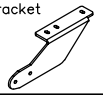	Pos. 12 Name: Bolt 8,8 B Quantity: 1 Dim. : M10x75mm 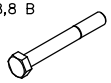	Pos. 19 Name: Spring washer Quantity: 6 Dim. : ø 12,2 mm 	
Pos. 6 Name: Fish–plate Quantity: 2 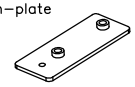	Pos. 13 Name: Bolt 8,8 B Quantity: 4 Dim. : M12x35mm 	Pos. 20 Name: Spring washer Quantity: 7 Dim. : ø 10,2 mm 	

NOTE

After install the towbar you should get adequate note in registration book (at authorised service station).The car should be equipped with:

- Indicators
- Tow mirrors

After 1000km check all bolts and nuts. The ball of towbar must be always kept clear and conserve with a grease

PPUH AUTO-HAK S.J.

Produkcja Haków Holowniczych
Henryk & Zbigniew Nejman
76-200 SŁUPSK ul. Słoneczna 16K
tel/fax (059) 8-414-414; 8-414-413
E-mail: office@autohak.com.pl
www. autohak.com.pl

Towing hitch (without electrical set)

Class: **A50-X** Cat. no. **T39**
Designed for:
Manufacturer: **KIA**
Model: **RIO**
Type: **5 doors**
produced since 2000 till 2005

Technical data:
D-value: **6,4 kN**
maximum trailer weight: **1100 kg**
maximum vertical cup load: **50 kg**

Approval number acc. to regulations EKG/ONZ 55.01: E20-55R-01 1403

Foreword

This towbar is designed according to rules of safety traffic regulations. The towing hitch is a safety component and can be install only by qualified personnel. Any alteration or conversion of the towing hitch is prohibited and would lead to cancellation of design certification. Remove insulating compound and underseal from vehicle (if present) in the area of the matting surfaces of the towing hitch.
The vehicle manufacturer's specifications regarding trailer load and max. vertical cup load are decisive for driving, and values for the towing hitch cannot be exceeded.
D-value formula:

$$\frac{\text{Max trailer weight [kg]} \times \text{Max vehicle weight [kg]}}{\text{Max trailer weight [kg]} + \text{Max vehicle weight [kg]}} \times \frac{9{,}81}{1000} = D\ [kN]$$