FITTING INSTRUCTION

Clamp mark in acc. with		Cables joining
ISO	PN	
1	L	Left directional lights
2	+	Rear fog lights
3	31	Ground
4	R	Right directional lights
5	58R	Right side parking lights
6	54	Stoplights
7	58L	Left side parking lights

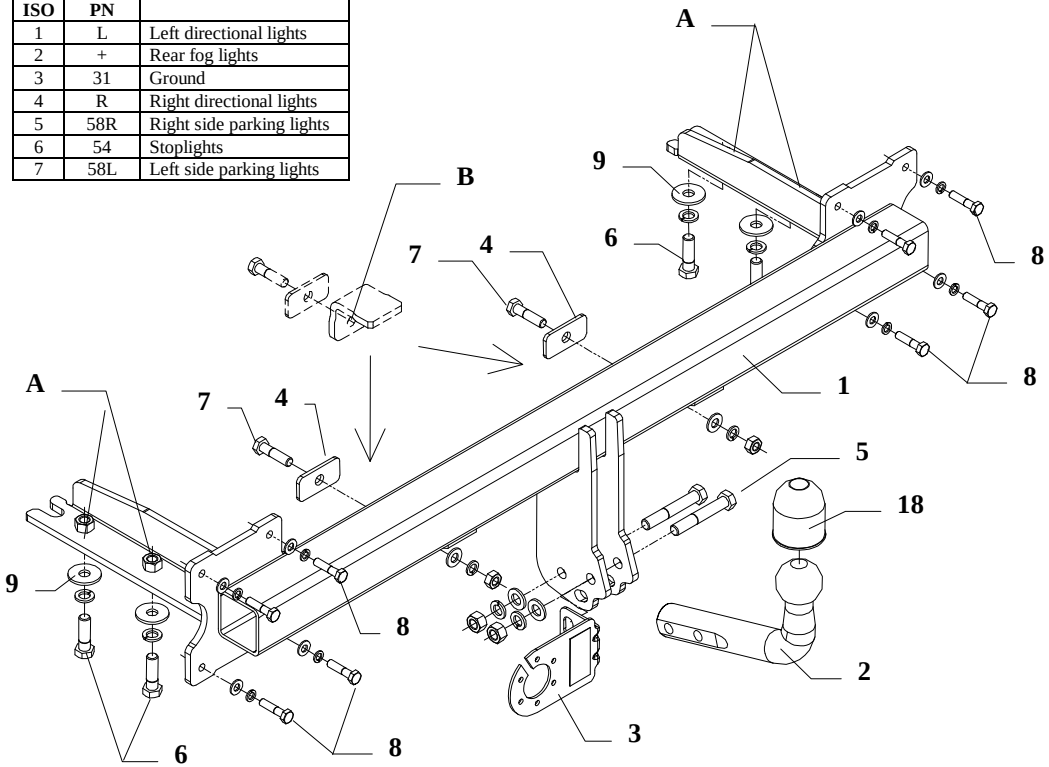

This towbar is designed to assembly in following cars:
KIA CARNIVAL produced since 01.2000 till 07.2001 and since 08.2001 till 12.2005, catalogue no. **T16** and is prepared to tow trailers max total weight **2000 kg** and max vertical load **80 kg.**

From manufacturer

Thank you for buying our product. Their reliability has been confirmed in many tests. Reliability of towbar depends also on correct assembly and right operation. For this reasons we kindly ask to read carefully this instruction and apply to hints.

The towbar should be install in points described by a car producer.

The instruction of the assembly

1. Disassemble the rear bumper.
2. Disassemble brackets from the bumper (not used any more).
3. Put main bar of the towbar (pos. 1) to chassis members and fix by bolts M12x40mm (pos. 6) in points pos. A.
4. Through holes pos. B drill holes in rear panel using bit ø10,5mm.
5. Disassemble main bar. Fix main bar and the bumper together. NOTE! Cut out fragments of the bumper before join - see figure 2.
6. In this way prepared unit put again to chassis members and fix in points pos. A and B as shown on the drawing.
7. Fix tow-ball (pos. 2) and socket plate (pos. 3) by bolts M12x75mm (pos. 4) from accessories.
8. Tighten all bolts according to the torque shown in the table.
9. Connect electric wires of 7-poles socket according to the instruction of the car. (Recommend to make at authorized service station)
10. Complete paint layer damaged during installation.

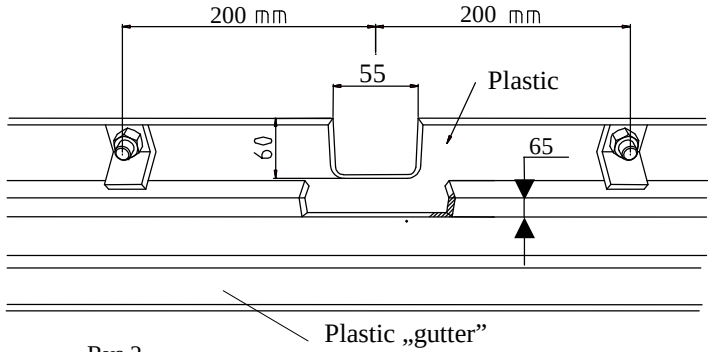

Rys 2.

Torque settings for nuts and bolts (8,8):		
M6 - 11 Nm	**M8 -** 25 Nm	**M10 -** 50 Nm
M12 - 87 Nm	**M14 -** 138 Nm	**M16 -** 210 Nm

NOTE

After install the towbar you should get adequate note in registration book (at authorised service station).The car should be equipped with:

- Indicators
- Tow mirrors

After 1000km of exploitation check all bolts and nuts. The ball of towbar must be always kept clear and conserve with a grease.

Towbar accessories:

Pos. 1 Name: Main bar Quantity: 1 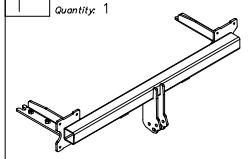	Pos. 5 Name: Bolt 8,8 B Quantity: 2 Dim. : M12x75mm 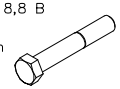	Pos. 10 Name: Nut 8 B Quantity: 2 Dim. : M12 	Pos. 15 Name: Spring washer Quantity: 6 Dim. : Ø 12,2 mm 
	Pos. 6 Name: Bolt 8,8 B Quantity: 4 Dim. : M12x40mm 	Pos. 11 Name: Nut 8 B Quantity: 2 Dim. : M10 	Pos. 16 Name: Spring washer Quantity: 2 Dim. : Ø 10,2 mm 
Pos. 2 Name: Tow ball Quantity: 1 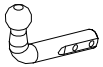	Pos. 7 Name: Bolt 8,8 B Quantity: 2 Dim. : M10x40mm 	Pos. 12 Name: Plain washer Quantity: 2 Dim. : Ø 13 mm 	Pos. 17 Name: Spring washer Quantity: 8 Dim. : Ø 8,2 mm 
Pos. 3 Name: Socket plate Quantity: 1 	Pos. 8 Name: Bolt 8,8 B Quantity: 8 Dim. : M8x35mm 	Pos. 13 Name: Plain washer Quantity: 2 Dim. : Ø 10,5 mm 	Pos. 18 Name: Ball cover Quantity: 1 
Pos. 4 Name: Rectangular washer Quantity: 2 	Pos. 9 Name: Washer Quantity: 4 Dim. : ø35xø12x3mm 	Pos. 14 Name: Plain washer Quantity: 8 Dim. : Ø 8,5 mm 	

PPUH AUTO-HAK S.J.

Produkcja Zaczepów Kulowych
Henryk & Zbigniew Nejman
76-200 SŁUPSK ul. Słoneczna 16K
tel/fax (059) 8-414-414; 8-414-413
E-mail: office@autohak.com.pl
www. autohak.com.pl

Towing hitch (without electrical set)

Class: **A50-X** Cat. no. **T16**
Designed for:
Manufacturer: **KIA**
Model: **CARNIVAL**
produced since 01.2000 till 07.2001
and since 08.2001 till 12.2005

Technical data:
D-value: **11,33 kN**
maximum trailer weight: **2000 kg**
maximum vertical cup load: **80 kg**

Approval number acc. to regulations EKG/ONZ 55.01: E20-55R-01 1283

Foreword

This towing hitch is designed according to rules of safety traffic regulations. The towing hitch is a safety component and can be install only by qualified personnel. Any alteration or conversion of the towing hitch is prohibited and would lead to cancellation of design certification. Remove insulating compound and underseal from vehicle (if present) in the areas of the matting surfaces of the towing hitch.
The vehicle manufacturer's specifications regarding trailer load and max. vertical cup mass are decisive for driving whereat values for the towing hitch cannot be exceeded.
D-value formula:

$$\frac{\text{Max trailer weight [kg]} \times \text{Max vehicle weight [kg]}}{\text{Max trailer weight [kg]} + \text{Max vehicle weight [kg]}} \times \frac{9{,}81}{1000} = D\ [\text{kN}]$$