FITTING INSTRUCTION

Clamp mark in acc. with		Cables joining
ISO	PN	
1	L	Left directional lights
2	+	Rear fog lights
3	31	Ground
4	R	Right directional lights
5	58R	Right side parking lights
6	54	Stoplights
7	58L	Left side parking lights

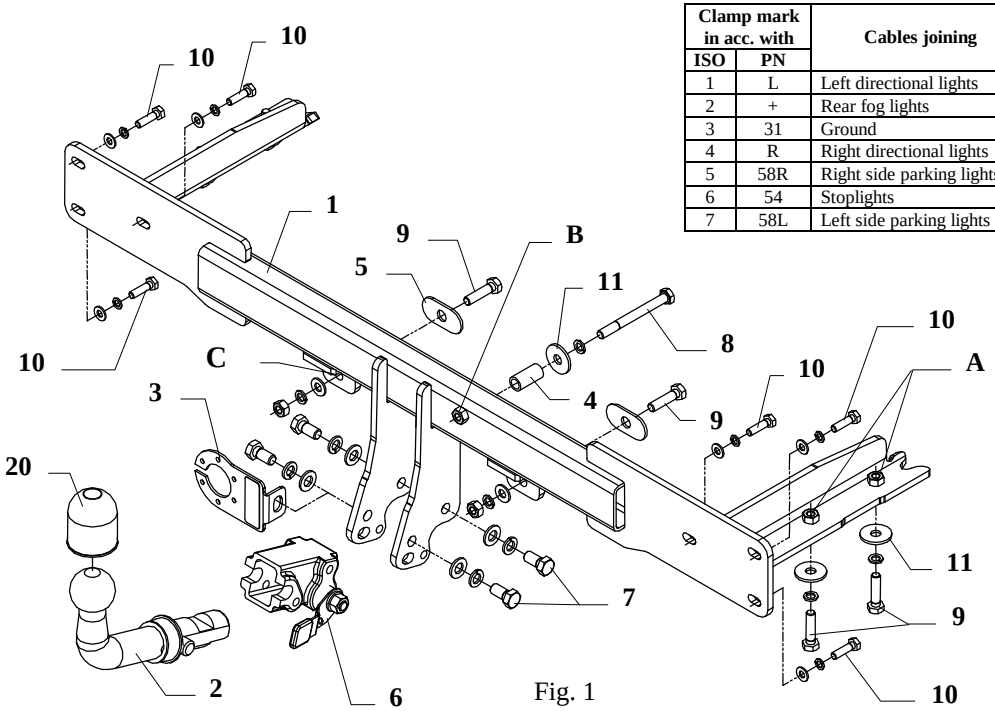

Fig. 1

This towing hitch is designed to assembly in following cars:
Kia Carnival, produced since 1997 till 12.1999, catalogue no. **T14A** and is prepared to tow trailers max total weight **2000 kg** and max vertical load **80 kg**.

From manufacturer

Thank you for buying our product. Their reliability has been confirmed in many tests. Reliability of towing hitch depends also on correct assembly and right operation. For this reasons we kindly ask to read carefully this instruction and apply to hints.

The towing hitch should be install in points described by a car producer.

Torque settings for nuts and bolts (8,8):	
M 8 - 25 Nm	**M 10 -** 55 Nm
M 12 - 85 Nm	**M 14 -** 135 Nm

The instruction of the assembly

1. Disassemble a bumper and a spare wheel.
2. From the bumper, twist off the brackets (they will not reassembled).
3. Insert the main bar of towing hitch into chassis and twist with M12x40mm (pos. 9) bolts in marked points (pos. A).
4. Through the holes (pos. B and C) drill to ø10,5 mm hole. From the inside, drill the hole (pos. B) to ø17 mm.
5. Disassemble the towing hitch an then join with the bumper after previous cut a fragment in the bumper. Look the fig. 2.
6. In this way prepared towing hitch with the bumper apply to the chassis again and fix across the hole pos. A.
7. Apply the distance sleeve ø17mm, L=35mm (pos. 4) to the hole (pos. B) and fit with the M10x100mm (pos. 8) bolt. By the holes (pos. C) fix with the M10x40mm (pos. 9) bolts an the attached washers (pos. 5).
8. Fix body of the automat (pos. 11) and the socket plate (pos. 3) using bolts M12x25mm (pos. 7) from accessories. Place tow-ball (pos. 2) according to supplied instruction.
9. Fix tight all bolts according to the torque shown in the table.
10. Connect the electric wires to the electric installation, in accordance with the instructions of the car.
11. Complete the possible decreases of the paint cover of hitch, originate during the installation.

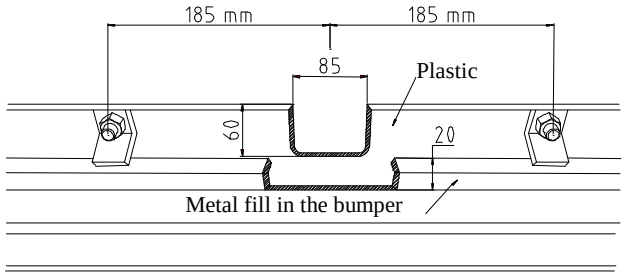

Fig. 2

NOTE

After install the towing hitch you should get adequate note in registration book (at authorised service station).The car should be equipped with:

- Indicators
- Tow mirrors

After 1000km check all bolts and nuts. The ball of towing hitch must be always kept clear and conserve with a grease.

Part list:

Pos. 1 Main bar PCS.: 1 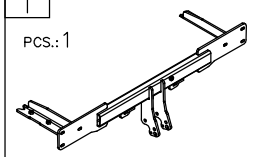	Pos. 5 Longituginal washer 60x30x3mm PCS.: 2 	Pos. 10 Bolt 8,8 B M8x30mm PCS.: 6 	Pos. 15 Spring washer ø12mm PCS.: 4 
	Pos. 6 Body of the automat PCS.: 1 	Pos. 11 Washer ø37xø13x3mm PCS.: 5 	Pos. 16 Spring washer ø10mm PCS.: 7 
Pos. 2 Tow ball PCS.: 1 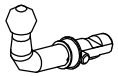	Pos. 7 Bolt 8,8 B M12x25mm PCS.: 4 	Pos. 12 Plain washer ø12mm PCS.: 4 	Pos. 17 Spring washer ø8mm PCS.: 6 
Pos. 3 Socket plate PCS.: 1 	Pos. 8 Bolt 8,8 B M10x100mm PCS.: 1 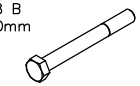	Pos. 13 Plain washer ø10mm PCS.: 2 	Pos. 19 Nut 8 B M10 PCS.: 2 
Pos. 4 Distance sleeve ø17xø12,5mm L=35mm PCS: 1 	Pos. 9 Bolt 8,8 B M10x40mm PCS.: 6 	Pos. 14 Plain washer ø8mm PCS.: 6 	Pos. 19 Body plug PCS.: 1 
			Pos. 20 Ball cover PCS.: 1 

PPUH AUTO-HAK S.J.

Produkcja Haków Holowniczych
Henryk & Zbigniew Nejman
76-200 SŁUPSK ul. Słoneczna 16K
tel/fax (059) 84-14-414; 84-14-413
e-mail: office@autohak.com.pl
www. autohak.com.pl

Towing hitch (without electrical set)

Class: **A50-X** Cat. no. **T14A**
Designed for:
Manufacturer: **KIA**
Model: **CARNIVAL**
produced since 1997 till 12.1999

Technical data:
D-value: **11,6 kN**
maximum trailer weight: **2000 kg**
maximum vertical cup load: **80 kg**

Approval number according to Directive 94/20/EC: e20*94/20*0290*00

Foreword

This towing hitch is designed according to rules of safety traffic regulations. The towing hitch is a safety component and can be installed only by qualified personnel. Any alteration or conversion of the towing hitch is prohibited and would lead to cancellation of design certification. Remove insulating compound and underseal from vehicle (if present) in the areas of the matting surfaces of the towing hitch.
The vehicle manufacturer's specifications regarding trailer load and max. vertical cup load are decisive for driving, and values for the towing hitch cannot be exceeded.
D-value formula:

$$\frac{\text{Max trailer weight [kg]} \times \text{Max vehicle weight [kg]}}{\text{Max trailer weight [kg]} + \text{Max vehicle weight [kg]}} \times \frac{9{,}81}{1000} = D\ [kN]$$