Towbar accessories:

Pos. 1 Name: Main bar Quantity: 1 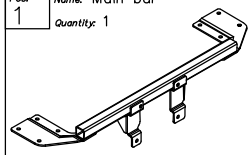	Pos. 5 Name: Fish–plate Quantity: 1 Dim. : 240x35mm 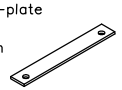	Pos. 10 Name: Bolt 8,8 B Quantity: 8 Dim. : M8x30mm 	Pos. 16 Name: Plain washer Quantity: 16 Dim. : Ø 8,5 mm 
	Pos. 6 Name: Fish–plate of the bracket Quantity: 4 Dim. : 130x25mm 	Pos. 11 Name: Body of the automat Quantity: 1 	Pos. 17 Name: Spring washer Quantity: 4 Dim. : Ø 12,2 mm 
Pos. 2 Name: Tow ball Quantity: 1 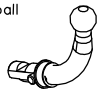	Pos. 7 Name: Bolt 8,8 B Quantity: 4 Dim. : M12x25mm 	Pos. 12 Name: Nut 8 B Quantity: 6 Dim. : M10 	Pos. 18 Name: Spring washer Quantity: 6 Dim. : Ø 10,2 mm 
Pos. 3 Name: Socket plate Quantity: 1 	Pos. 8 Name: Bolt 8,8 B Quantity: 2 Dim. : M10x70mm 	Pos. 13 Name: Nut 8 B Quantity: 8 Dim. : M8 	Pos. 19 Name: Spring washer Quantity: 8 Dim. : Ø 8,2 mm 
Pos. 4 Name: Bracket of the ball Quantity: 1 	Pos. 9 Name: Bolt 8,8 B Quantity: 4 Dim. : M10x30mm 	Pos. 14 Name: Plain washer Quantity: 4 Dim. : Ø 13 mm 	Pos. 20 Name: Ball cover Quantity: 1 
		Pos. 15 Name: Plain washer Quantity: 6 Dim. : Ø 10,5 mm 	Pos. 21 Name: Body plug Quantity: 1 

PPUH AUTO-HAK Sp. J.

Produkcja Zaczepów Kulowych
Henryk & Zbigniew Nejman
76-200 SŁUPSK ul. Słoneczna 16K
tel/fax (059) 8-414-414; 8-414-413
E-mail: office@autohak.com.pl
www.autohak.com.pl

Towing hitch (without electrical set)

Class: **A50-X** Cat. no. **R14A**
Designed for:
Manufacturer: **FIAT**
Model: **SIENA**
Type: **4 doors**
produced since 1996 till 2002

Technical data:
D-value: **6,3 kN**
maximum trailer weight: **1300 kg**
maximum vertical cup load: **50 kg**

Approval number acc. to regulations EKG/ONZ 55.01: E20-55R-01 1284

Foreword

This towbar is designed according to rules of safety traffic regulations. The towing hitch is a safety component and can be install only by qualified personnel. Any alteration or conversion of the towing hitch is prohibited and would lead to cancellation of design certification. Remove insulating compound and underseal from vehicle (if present) in the area of the matting surfaces of the towing hitch.
The vehicle manufacturer's specifications regarding trailer load and max. vertical cup load are decisive for driving whereat values for the towing hitch cannot be exceeded.
D-value formula:

$$\frac{\text{Max trailer weight [kg]} \times \text{Max vehicle weight [kg]}}{\text{Max trailer weight [kg]} + \text{Max vehicle weight [kg]}} \times \frac{9{,}81}{1000} = D\ [\text{kN}]$$

FITTING INSTRUCTION

Clamp mark in acc. with		Cables joining
ISO	PN	
1	L	Left directional lights
2	+	Rear fog lights
3	31	Ground
4	R	Right directional lights
5	58R	Right side parking lights
6	54	Stoplights
7	58L	Left side parking lights

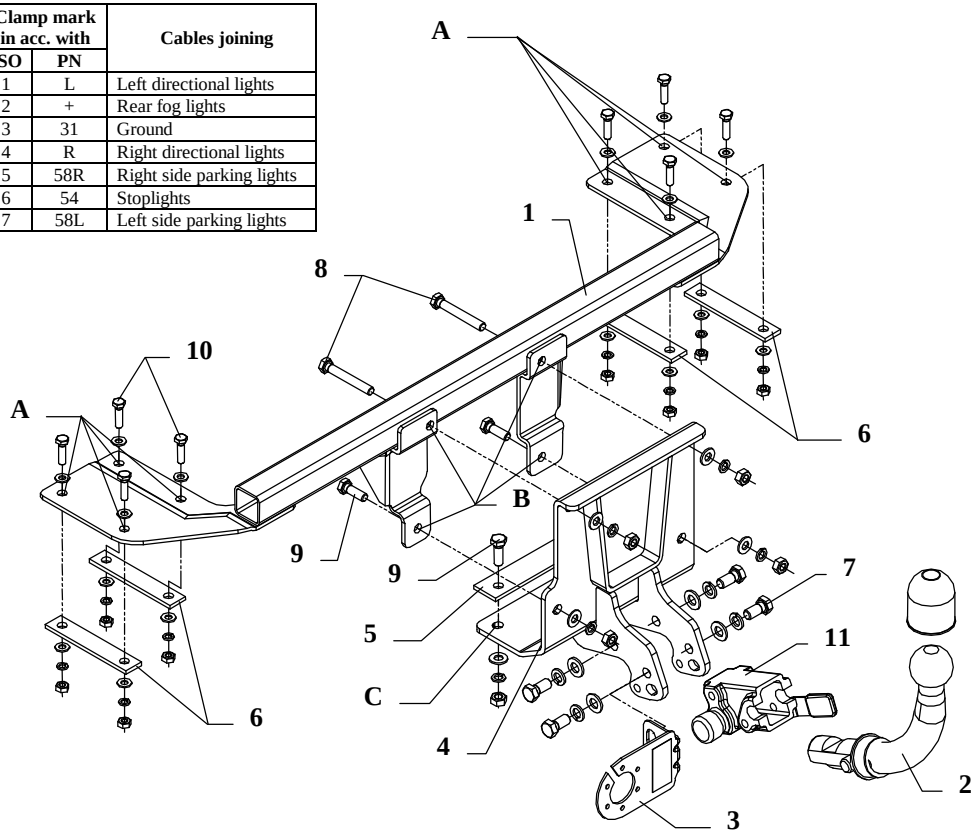

This towbar is designed to assembly in following cars: **FIAT SIENA 4 doors,** produced since 1996 till 2002, catalogue no. **R14A** and is prepared to tow trailers max total weight **1300 kg** and max vertical load **50 kg**.

From manufacturer

Thank you for buying our product. Their reliability has been confirmed in many tests. Reliability of towbar depends also on correct assembly and right operation. For this reasons we kindly ask to read carefully this instruction and apply to hints.

The towbar should be install in points described by a car producer.

The instruction of the assembly

1. Take out the spare wheel.
2. Take off carpets from left and right side of the trunk, next pull it for bumper unscrew.
3. Disassemble a bumper.
4. Put inside the trunk the main bar of the towbar (pos. 1) – place it in that way so it stick to rear side of the trunk.
5. Through holes (pos. A) drill using bit ø9mm and next fix using bolts M8x30mm – pos. 10 (use fish-plates – pos. 6 – put them from below the car).
6. Through holes (pos. B) drill using bit ø11mm and next put to rear side bracket of the ball (pos. 4) and fix all using bolts M10x70mm – pos. 8 (top) and M10x30mm – pos. 9 (below).
7. From below the car through holes (pos. C) drill using bit ø11mm and fix using bolts M10x30mm (pos. 9) through fish-plate (pos. 5) – fish-plate inside trunk..
8. In bottom part of bumper cut out fragment 80x30mm.
9. Assemble bumper and covers in trunk.
10. Tighten all bolts according to the torque shown in the table.
11. Fix body of the automat (pos. 11) and the socket plate (pos. 3) using bolts M12x25mm (pos. 7) from accessories. Place tow-ball (pos. 2) according to supplied instruction.
12. Connect electric wires of 7-poles socket according to the instruction of the car. (Recommend to make at authorized service station).
13. Complete the paint coating damaged during installation.

Torque settings for nuts and bolts (8,8):

M6 - 11 Nm	**M8 -** 25 Nm	**M10 -** 50 Nm
M12 - 87 Nm	**M14 -** 138 Nm	**M16 -** 210 Nm

NOTE

After install the towbar you should get adequate note in registration book (at authorised service station).The car should be equipped with:

- Indicators
- Tow mirrors

After 1000km of exploitation check all bolts and nuts. The ball of towbar must be always kept clear and conserve with a grease.