FITTING INSTRUCTION

Clamp mark in acc. with		Cables joining
ISO	PN	
1	L	Left directional lights
2	+	Rear fog lights
3	31	Ground
4	R	Right directional lights
5	58R	Right side parking lights
6	54	Stoplights
7	58L	Left side parking lights

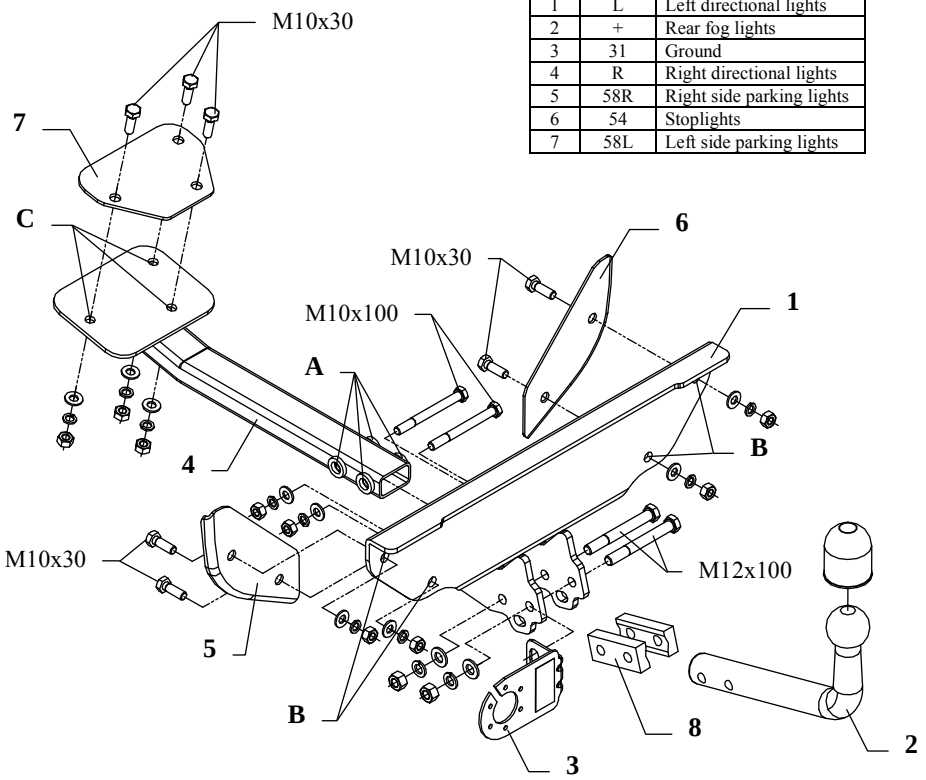

This towbar is designed to assembly in following cars: **FIAT PUNTO, 3-5 doors,** produced since 1994 till 08.1999, catalogue no. **R07** and is prepared to tow trailers max total weight **1300 kg** and max vertical load **50 kg**.

From manufacturer

Thank you for buying our product. Their reliability has been confirmed in many tests. Reliability of towbar depends also on correct assembly and right operation. For this reasons we kindly ask to read carefully this instruction and apply to hints.

The towbar should be install in points described by a car producer.

The instruction of the assembly

1. Take out the spare wheel from the trunk and disassemble the bumper.
2. The main bar of the towbar (pos. 1) and the longitudinal bar (pos. 4) fix using bolts M10x100mm (pos. 10) through holes (pos. A).
3. So prepared towbar put to the car in that way: the main bar of the towbar (pos. 1) must stick to rear piece of the car, and the longitudinal bar (pos. 4) from below to the spare wheel bowl.
4. Through holes (pos. B and C) make holes to the trunk with drill ø10,5mm.
5. Put fish-plates (pos. 5, 6 and 7) from the trunk side, next fix them with the towbar using bolts M10x30mm (pos. 11) through maked holes (pos. B and C).
6. Fix tow-ball (pos. 2) with cover plates (pos. 8) and socket plate (pos. 3) using bolts M12x100mm (pos. 9) from accessories.
7. From below of the bumper cut out the fragment 70x70mm (in its central part).
8. Assemble rear bumper to the car.
9. Tighten all bolts according to the torque shown in the table.
10. Connect electric wires of 7-poles socket according to the instruction of the car. (Recommend to make at authorized service station).
11. Complete paint layer damaged during installation.

Torque settings for nuts and bolts (8,8):	
M 8 - 25 Nm	**M 10** - 55 Nm
M 12 - 85 Nm	**M 14** - 135 Nm

NOTE

After install the towbar you should get adequate note in registration book (at authorised service station).The car should be equipped with:

- Indicators
- Tow mirrors

After 1000km check all bolts and nuts. The ball of towbar must be always kept clear and conserve with a grease.

Towbar accessories:

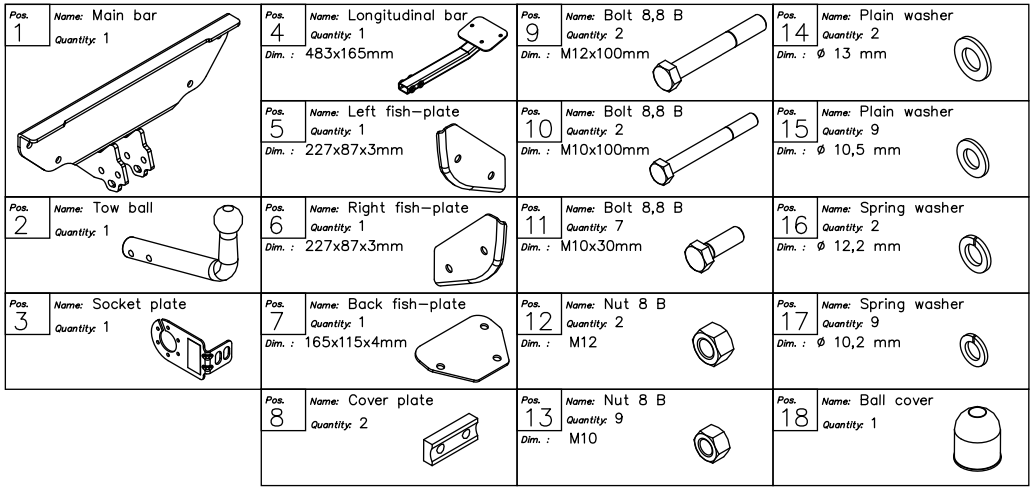

PPUH AUTO-HAK S.J.

Produkcja Haków Holowniczych
Henryk & Zbigniew Nejman
76-200 SŁUPSK ul. Słoneczna 16K
tel./fax (059) 8-414-414; 8-414-413
e-mail: office@autohak.com.pl
www. autohak.com.pl

Towing hitch (without electrical set)

Class: **A50-X** Cat. no. **R07**
Designed for:
Manufacturer: **FIAT**
Model: **PUNTO**
Type: **3-5 doors**
produced since 1994 till 08.1999

Technical data:
D-value: **6,65 kN**
maximum trailer weight: **1300 kg**
maximum vertical cup load: **50 kg**

Approval number acc. to regulations EKG/ONZ 55.01: E20-55R-01 0969

Foreword

This towing hitch is designed according to rules of safety traffic regulations. The towing hitch is a safety component and can be install only by qualified personnel. Any alteration or conversion of the towing hitch is prohibited and would lead to cancellation of design certification. Remove insulating compound and underseal from vehicle (if present) in the area of the matting surfaces of the towing hitch.
The vehicle manufacturer's specifications regarding trailer mass and max. vertical cup mass are decisive for driving whereat values for the towing hitch cannot be exceeded.
D-value formula:

$$\frac{\text{Max trailer weight [kg]} \times \text{Max vehicle weight [kg]}}{\text{Max trailer weight [kg]} + \text{Max vehicle weight [kg]}} \times \frac{9{,}81}{1000} = D\ [\text{kN}]$$