Towing hitch accessories:

Pos. 1 Name: Main bar Quantity: 1 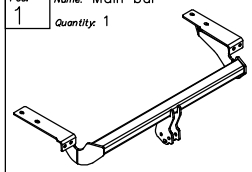	Pos. 5 Name: Bolt 8,8 B Quantity: 2 Dim. : M12x70mm 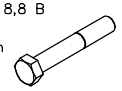	Pos. 10 Name: Plain washer Quantity: 4 Dim. : ø35xø12x4mm 	Pos. 15 Name: Spring washer Quantity: 4 Dim. : ø 10,2 mm 
	Pos. 6 Name: Bolt 8,8 B Quantity: 4 Dim. : M8x50mm 	Pos. 11 Name: Plain washer Quantity: 5 Dim. : ø25xø9x2mm 	Pos. 16 Name: Spring washer Quantity: 5 Dim. : ø 8,2 mm 
Pos. 2 Name: Tow-ball Quantity: 1 	Pos. 7 Name: Nut 8 B Quantity: 2 Dim. : M12 	Pos. 12 Name: Plain washer Quantity: 2 Dim. : ø 13 mm 	Pos. 17 Name: Bolt 8,8 B Quantity: 1 Dim. : M8x30mm 
Pos. 3 Name: Socket plate Quantity: 1 	Pos. 8 Name: Nut 8 B Quantity: 4 Dim. : M10 	Pos. 13 Name: Plain washer Quantity: 2 Dim. : ø 8,5 mm 	Pos. 18 Name: Spring Quantity: 1 
Pos. 4 Name: Distance sleeve Quantity: 1 Dim. : ø25xø16x7mm 	Pos. 9 Name: Nut 8 B Quantity: 2 Dim. : M8 	Pos. 14 Name: Spring washer Quantity: 2 Dim. : ø 12,2 mm 	Pos. 19 Name: Ball cover Quantity: 1 

PPUH AUTO-HAK S.J.

Produkcja Zaczepów Kulowych
Henryk & Zbigniew Nejman
76-200 SŁUPSK ul. Słoneczna 16K
tel/fax (059) 8-414-414; 8-414-413
E-mail: office@autohak.com.pl
www.autohak.com.pl

Towing hitch (without electrical set)

Class: **A50-X** Cat. no. **P26**
Designed for:
Manufacturer: **CITROEN**
Model: **C4**
Type: **3/5 doors**
produced since 2004 till 2010

Technical data:
D-value: **8,05 kN**
maximum trailer weight: **1500 kg**
maximum vertical cup mass: **66 kg**

Approval number acc. to regulations EKG/ONZ 55.01: E20-55R-01 1518

Foreword

This towing hitch is designed according to rules of safety traffic regulations. The towing hitch is a safety component and can be install only by qualified personnel. Any alteration or conversion of the towing hitch is prohibited and would lead to cancellation of design certification. Remove insulating compound and underseal from vehicle (if present) in the area of the matting surfaces of the towing hitch.
The vehicle manufacturer's specifications regarding trailer mass and max. vertical cup mass are decisive for driving whereat values for the towing hitch cannot be exceeded.
D-value formula:

$$\frac{\text{Max trailer weight [kg]} \times \text{Max vehicle weight [kg]}}{\text{Max trailer weight [kg]} + \text{Max vehicle weight [kg]}} \times \frac{9{,}81}{1000} = D\ [\text{kN}]$$

FITTING INSTRUCTION

Clamp mark in acc. with		Cables joining
ISO	PN	
1	L	Left directional lights
2	+	Rear fog lights
3	31	Ground
4	R	Right directional lights
5	58R	Right side parking lights
6	54	Stoplights
7	58L	Left side parking lights

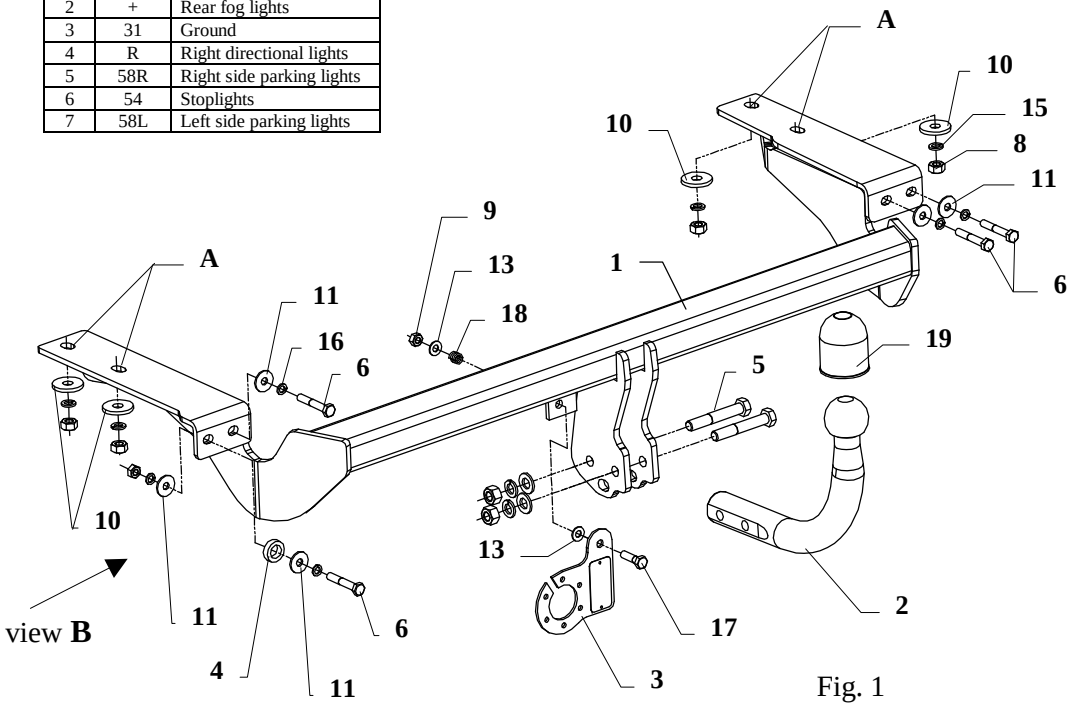

Fig. 1

This towing hitch is designed to assembly in following cars: **CITROEN C4, 3/5 doors,** produced since 2004 till 2010, catalogue no. **P26** and is prepared to tow trailers max total weight **1500 kg** and max vertical mass **66 kg**.

From manufacturer

Thank you for buying our product. Their reliability has been confirmed in many tests. Reliability of towing hitch depends also on correct assembly and right operation. For this reasons we kindly ask to read carefully this instruction and apply to hints.

The towing hitch should be install in points described by a car producer.

The instruction of the assembly

1. To install our towbar is it not necessary disassemble the rear bumper. Everything what You have to do is unscrew bolts in lower egde and disassemble fog light and reverse light. Next get lower the muffler – unfasten from last handle.
2. Twist off three bolts M8 of central bumper filling and disassemble it (not used any more)
3. Slip main bar (pos. 1) under bumper – pull lit back, next holes pos. A put on bolts M10 protruding from chassis members and fix it using nuts M10 and big washers (pos. 10) from towbar accessories.
4. In places of original bolts M8 fix bolts M8x50mm (pos. 6) and next from inside fix it by nuts, remember about big washers (pos. 11)
5. In the event of last bolt on left side, the way of mounting show fig. 2.
6. Fix tow-ball (pos. 2) using bolts M12x70mm from accessories.
7. Fix the socket plate (pos. 3) as shown on the drawing.
8. Tighten all bolts according to the torque shown in the table.
9. Connect electric wires of 7-poles socket according to the instruction of the car. (Recommend to make at authorized service station)
10. Complete paint layer damaged during installation.

Fig. 2 View **B**

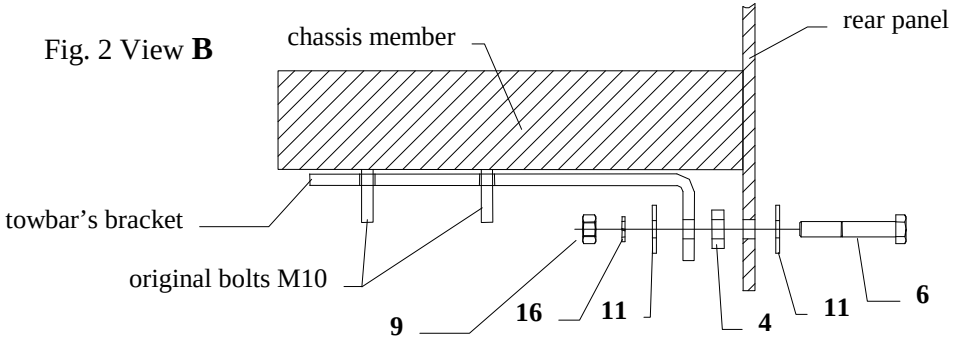

Torque settings for nuts and bolts (8,8):	
M 8 - 25 Nm	**M 10 -** 55 Nm
M 12 - 85 Nm	**M 14 -** 135 Nm

NOTE

After install the towing hitch you should get adequate note in registration book (at authorised service station). The car should be equipped with:

- Indicators
- Tow mirrors

After 1000km check all bolts and nuts. The ball of towing hitch must be always kept clear and conserve with a grease.