FITTING INSTRUCTION

Clamp mark in acc. with		Cables joining
ISO	PN	
1	L	Left directional lights
2	+	Rear fog lights
3	31	Ground
4	R	Right directional lights
5	58R	Right side parking lights
6	54	Stoplights
7	58L	Left side parking lights

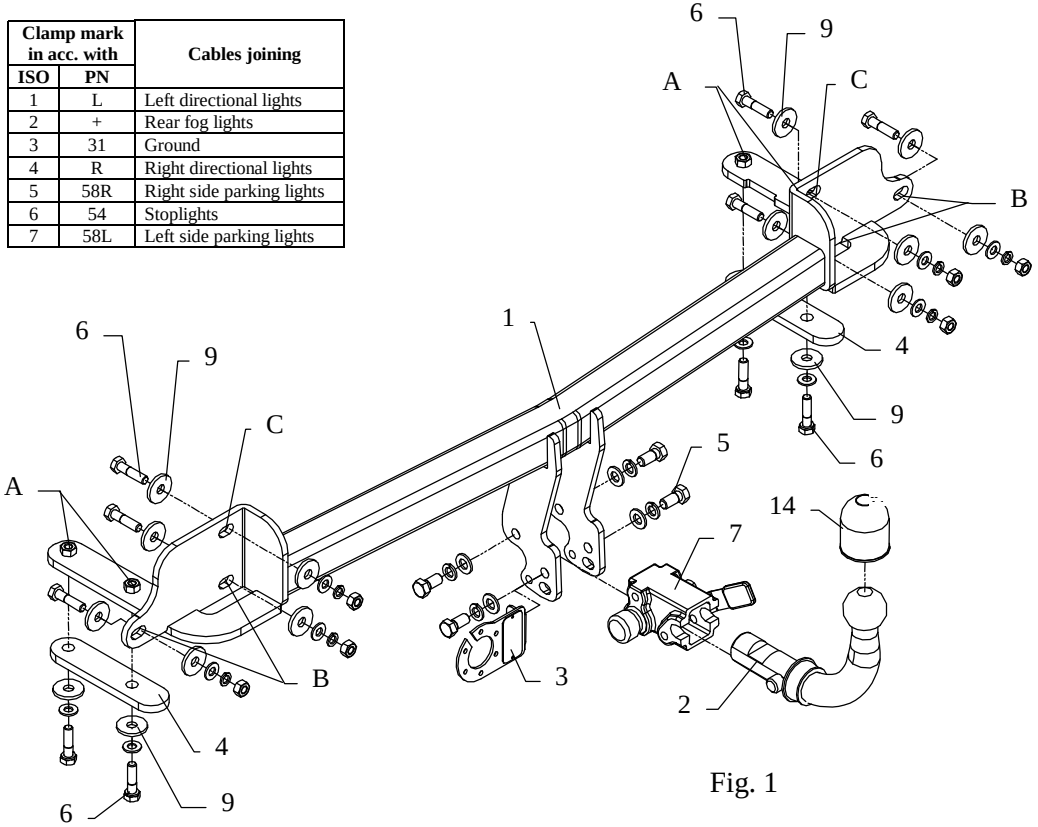

Fig. 1

This towbar is designed to assembly in following car:
MAZDA 323 F, 5 door, produced since 09.1998 till 12.2001 and since 2002 till 09.2003, catalogue number **M 50A** and is prepared to tow trailers max total weight **1600 kg** and max vertical load **75 kg**.

From manufacturer

Thank you for buying our product. Their reliability has been confirmed in many tests. Reliability of towbar depends also on correct assembly and correct exploitation. For this reasons we kindly ask to read carefully this instruction and apply to hints.

The towbar should be install in points described by a car producer.

The instruction of the assembly

1. Remove rear lights and the bumper.
2. Remove housings of chassis extension (not used any more).
3. Put distance plates into chassis extension.
4. Put main bar of towbar (pos. **1**) into chassis and screw loosely according to fig. 1 through hole pos. **A** using bolts M10x40mm (pos. **6**).
5. Through holes **B** drill holes in rear wall plate with bit ø10mm (both sides).
6. Loosely fix main bar to rear wall plate through holes **B** and **C** .
7. Adjust towbar in mid-position and tighten all bolts according to the torque shown in the table.
8. According to figure 2 cut out elements of the bumper.
9. Reinstall the bumper and rear lights.
10. Fix body of the automat (pos. **7**) and the socket plate (pos. **3**) using bolts M12x25mm (pos. **5**) from accessories. Place tow-ball (pos. **2**) according to supplied instruction.
11. Connect electric wires of 7-poles socket according to the instruction of the car. (Recommend to make at authorized service station)
12. Complete paint layer damaged during installation.

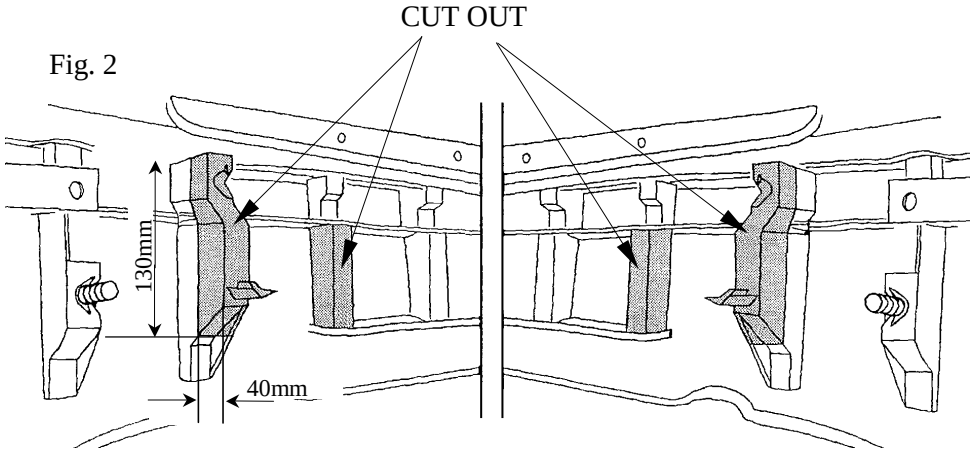

Fig. 2

Torque settings for nuts and bolts (8,8):		
M6 - 11 Nm	**M8 -** 25 Nm	**M10 -** 50 Nm
M12 - 87 Nm	**M14 -** 138 Nm	**M16** - 210 Nm

NOTE

After install the towbar you should get adequate note in registration book (at authorised service station).The car should be equipped with:

- Indicators
- Tow mirrors

After 1000km of exploitation check all bolts and nuts. The ball of towbar must be always kept clear and conserve with a grease.

Towbar accessories:

Pos. 1 — Name: Main bar — Quantity: 1 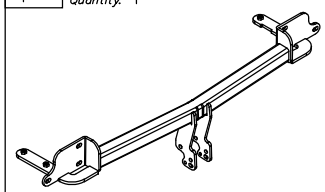	Pos. 5 — Name: Bolt 8,8 B — Quantity: 4 — Dim. : M12x25mm 	Pos. 10 — Name: Plain washer — Quantity: 4 — Dim. : ø 13 mm 
	Pos. 6 — Name: Bolt 8,8 B — Quantity: 10 — Dim. : M10x40mm 	Pos. 11 — Name: Plain washer — Quantity: 10 — Dim. : ø 10,5 mm 
Pos. 2 — Name: Tow ball — Quantity: 1 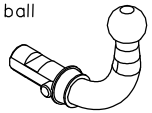	Pos. 7 — Name: Body of the automat — Quantity: 1 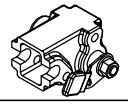	Pos. 12 — Name: Spring washer — Quantity: 4 — Dim. : ø 12,2 mm 
Pos. 3 — Name: Socket plate — Quantity: 1 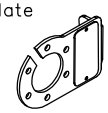	Pos. 8 — Name: Nut 8 B — Quantity: 6 — Dim. : M10 	Pos. 13 — Name: Spring washer — Quantity: 10 — Dim. : ø 10,2 mm 
Pos. 4 — Name: Fish–plate — Quantity: 2 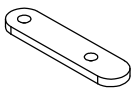	Pos. 9 — Name: Washer — Quantity: 16 — Dim. : ø35xø12x4mm 	Pos. 14 — Name: Ball cover — Quantity: 1 
		Pos. 15 — Name: Body plug — Quantity: 1 

PPUH AUTO-HAK S.J.

Produkcja Zaczepów Kulowych
Henryk & Zbigniew Nejman
76-200 SŁUPSK ul. Słoneczna 16K
tel/fax (059) 8-414-414; 8-414-413
E-mail: office@autohak.com.pl
www. autohak.com.pl

Towing hitch (without electrical set)

Class: **A50-X** Cat. no. **M50A**
Designed for:
Manufacturer: **MAZDA**
Model: **323 F**
Type: **5 door**
produced since 09.1998 till 12.2001 and since 2002 till 09.2003

Technical data:
D-value: **8,4 kN**
maximum trailer weight: **1600 kg**
maximum vertical cup load: **75 kg**

Approval number according to Directive 94/20/EC: e20*94/20*0060*00

Foreword

This towbar is design according to rules of safety traffic regulations. The towing hitch is a safety component and must be installed only by qualified personnel. Any alteration or conversion to the towing hitch is prohibited and would lead to cancellation of design certification. Remove insulating compound and underseal from vehicle (if present) in the area of the matting surfaces of the towing hitch.
The vehicle manufacturer's specifications regarding trailer load and max. vertical cup load are decisive for driving, and values for the towing hitch cannot be exceeded.
D-value formula:

$$\frac{\text{Max trailer weight [kg]} \times \text{Max vehicle weight [kg]}}{\text{Max trailer weight [kg]} + \text{Max vehicle weight [kg]}} \times \frac{9{,}81}{1000} = D\ [\text{kN}]$$