Towbar accessories:

Pos. 1 Main bar PCS.: 1 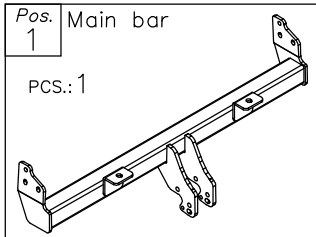	Pos. 4 Bolt 8,8 B M12x1,25x70mm PCS.: 2 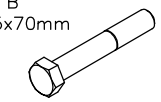	Pos. 8 Spring washer ø12,2mm PCS.: 2 
	Pos. 5 Bolt 8,8 B M10x35mm PCS.: 6 	Pos. 9 Spring washer ø10,2mm PCS.: 6 
Pos. 2 Tow ball (mounting set) PCS.: 1 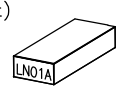	Pos. 6 Plain washer ø13mm PCS.: 2 	
Pos. 3 Socket plate PCS.: 1 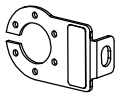	Pos. 7 Plain washer ø10,5mm PCS.: 6 	

PPUH AUTO-HAK S. J.

Produkcja Zaczepów Kulowych
Henryk & Zbigniew Nejman
76-200 SŁUPSK ul. Słoneczna 16K
tel/fax (059) 8-414-414; 8-414-413
E-mail: office@autohak.com.pl
www.autohak.com.pl

Towing hitch (without electrical set)

Class: **A50-X** Cat. no. **LN01A**
Designed for:
Manufacturer: **LAND ROVER**
Model: **FREELANDER**
Type: **3-5 doors**
produced since 1998 till 2007

Technical data:
D-value: **10,0 kN**
maximum trailer weight: **2000 kg**
maximum vertical cup load: **140 kg**

Approval number according to Directive 94/20/EC: e20*94/20*1025*00

Foreword

This towbar is designed according to rules of safety traffic regulations. The towing hitch is a safety component and can be install only by qualified personnel. Any alteration or conversion of the towing hitch is prohibited and would lead to cancellation of design certification. Remove insulating compound and underseal from vehicle (if present) in the area of the matting surfaces of the towing hitch.
The vehicle manufacturer's specifications regarding trailer load and max. vertical cup load are decisive for driving whereat values for the towing hitch cannot be exceeded.
D-value formula:

$$\frac{\text{Max trailer weight [kg]} \times \text{Max vehicle weight [kg]}}{\text{Max trailer weight [kg]} + \text{Max vehicle weight [kg]}} \times \frac{9{,}81}{1000} = D\ [\text{kN}]$$

FITTING INSTRUCTION

Clamp mark in acc. with		Cables joining
ISO	PN	
1	L	Left directional lights
2	+	Rear fog lights
3	31	Ground
4	R	Right directional lights
5	58R	Right side parking lights
6	54	Stoplights
7	58L	Left side parking lights

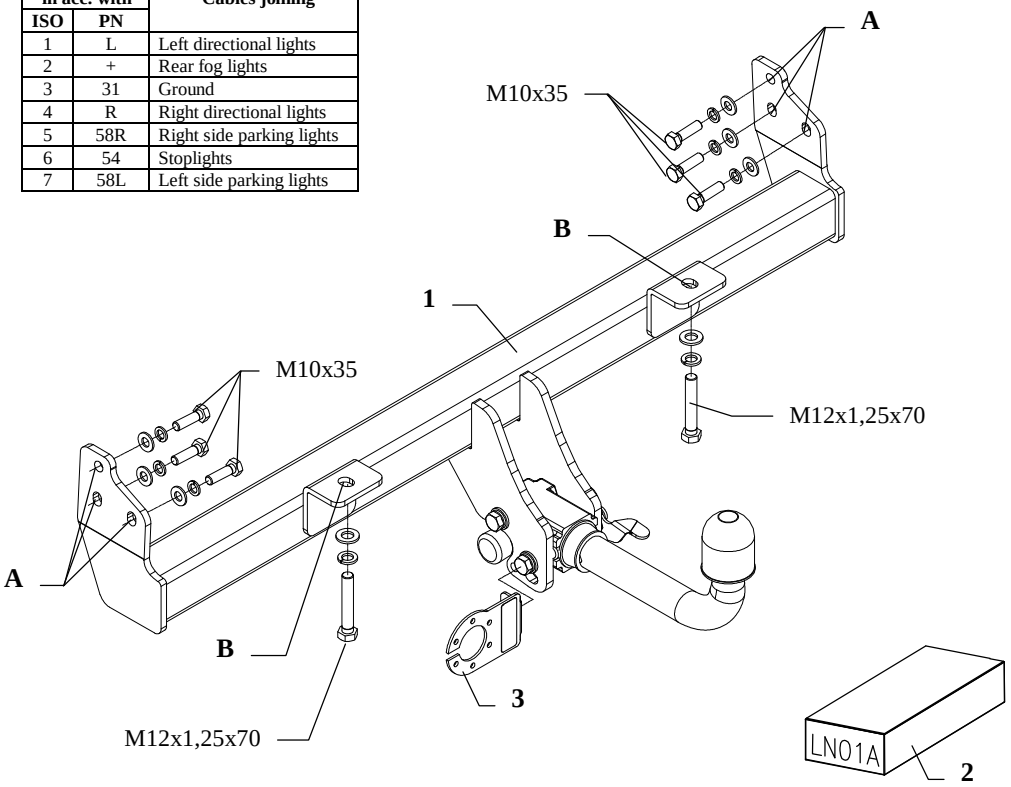

This towbar is designed to assembly in following car: **LAND ROVER FREELANDER, 3-5 doors,** produced since 1998 till 2007, catalogue no. **LN01A** and is prepared to tow trailers max total weight **2000 kg** and max vertical load **140 kg.**

From manufacturer

Thank you for buying our product. Their reliability has been confirmed in many tests. Reliability of towbar depends also on correct assembly and right operation. For this reasons we kindly ask to read carefully this instruction and apply to hints.

The towbar should be install in points described by a car producer.

The instruction of the assembly

1. From the right side of the frame unscrew original tow handle (not used any more).
2. Put the main bar of the towbar (pos. 1) to the frame that way, so holes (pos. A) agree to threaded holes and fix using bolts M10x35mm (pos. 5), and next through holes (pos. B) fix using bolts M12x1,25x70mm (pos. 4).
3. Fix body of the automat and the socket plate (pos. 3) using bolts M12x25mm from accessories. Place tow-ball according to supplied instruction.
4. Tighten all bolts according to the torque shown in the table.
5. Connect electric wires of 7-poles socket according to the instruction of the car. (Recommend to make at authorized service station).
6. Complete the paint coating damaged during instalment.

Torque settings for nuts and bolts (8,8):

M6 - 11 Nm	**M8 -** 25 Nm	**M10 -** 50 Nm
M12 - 87 Nm	**M14 -** 138 Nm	**M16 -** 210 Nm

NOTE

After install the towbar you should get adequate note in registration book (at authorised service station).The car should be equipped with:

- Indicators
- Tow mirrors

After 1000km of exploitation check all bolts and nuts. The ball of towbar must be always kept clear and conserve with a grease.