Clamp mark in acc. with		Cables joining
ISO	PN	
1	L	Left directional lights
2	+	Rear fog lights
3	31	Ground
4	R	Right directional lights
5	58R	Right side parking lights
6	54	Stoplights
7	58L	Left side parking lights

FITTING INSTRUCTION

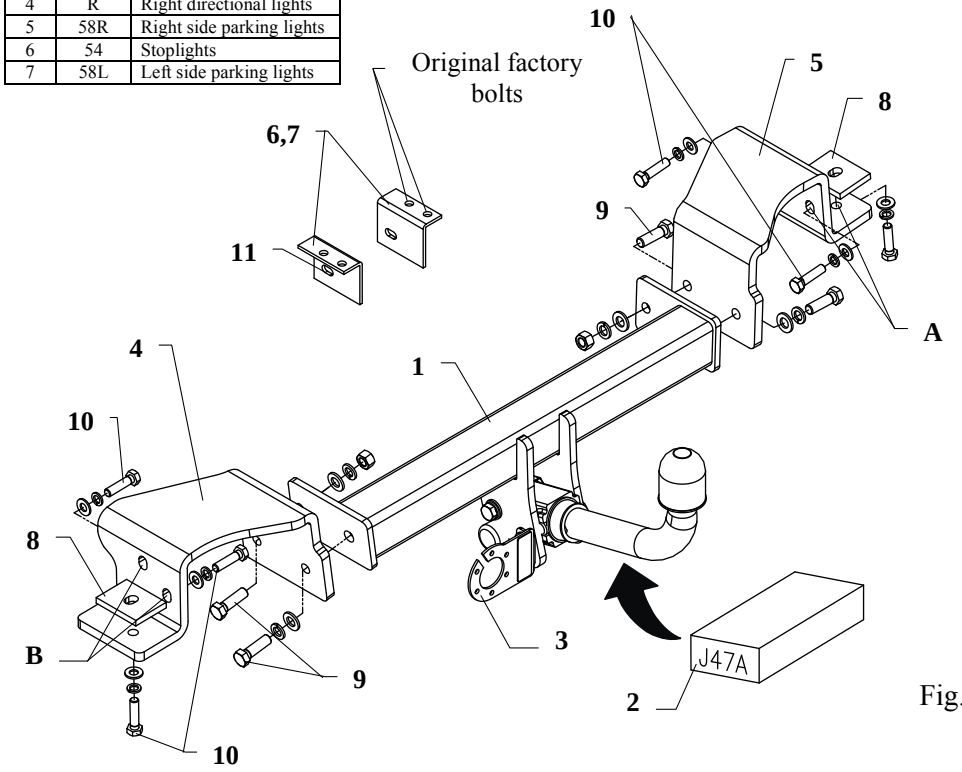

Fig. 1

This towbar is designed to assembly in following car: **HYUNDAI TRAJET (FO),** produced since 2000, catalogue no. **J47A** and is prepared to tow trailers max total weight **1950 kg** and max vertical load **80 kg**.

From manufacturer

Thank you for buying our product. Their reliability has been confirmed in many tests. Reliability of towbar depends also on correct assembly and right operation. For this reasons we kindly ask to read carefully this instruction and apply to hints.

The towbar should be install in points described by a car producer.

The instruction of the assembly

1. Take spare wheel out – disassemble original spare wheel handle, replace them with handles from towbar accessories (pos. 6 and 7).
2. Disassemble from right chassis member original tow handle (not used any more).
3. Get lower a muffler.
4. Cut out a fragment of bumper see fig. 2.

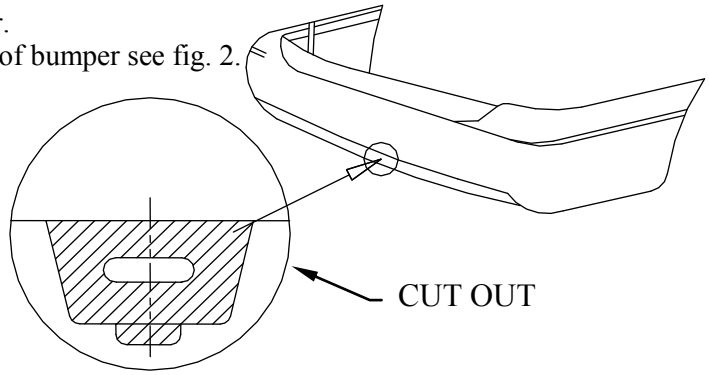

Fig. 2

5. Elements (pos. 4 and 5) put to chassis members (holes pos. A and B must agree with original points of towbar mounting) and fix it using bolts M10x1,25x40mm – poz. 11 (loosely), put washers (pos. 15) under bolts – see fig. 1.
6. Between elements (pos. 4 and 5) slip main bar of the towbar (pos. 1) and screw it using bolts M12x40mm (pos. 10).
7. Fix body of the automat and place tow-ball according to supplied instruction. Note! Remember to place socket plate (pos. 3) as shown on the drawing 1.
8. Tighten all bolts according to the torque shown in the table.
9. Connect electric wires of 7-poles socket according to the instruction of the car. (Recommend to make at authorized service station).
10. Complete the paint coating damaged during instalment.

Torque settings for nuts and bolts (8,8):		
M6 - 11 Nm	**M8** - 25 Nm	**M10** - 50 Nm
M12 - 87 Nm	**M14** - 138 Nm	**M16** - 210 Nm

NOTE

After install the towbar you should get adequate note in registration book (at authorised service station).The car should be equipped with:

- Indicators
- Tow mirrors

After 1000km check all bolts and nuts. The ball of towbar must be always kept clear and conserve with a grease.

Towbar accessories:

Pos. 1 Name: Main bar Quantity: 1 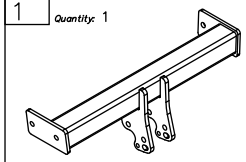	Pos. 5 Name: Right bracket Quantity: 1 Dim. : 248x206x132 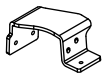	Pos. 10 Name: Bolt 8,8 B Quantity: 6 Dim. : M10x1,25x40mm 	Pos. 15 Name: Plain washer Quantity: 6 Dim. : Ø 10,5 mm 
	Pos. 6 Name: Left handle Quantity: 1 Dim. : 75x60x30 mm 	Pos. 11 Name: Bolt 8,8 B Quantity: 2 Dim. : M8x30mm 	Pos. 16 Name: Plain washer Quantity: 2 Dim. : Ø 8,5 mm 
Pos. 2 Name: Tow ball Quantity: 1 	Pos. 7 Name: Right handle Quantity: 1 Dim. : 75x60x30 mm 	Pos. 12 Name: Nut 8 B Quantity: 2 Dim. : M12 	Pos. 17 Name: Spring washer Quantity: 4 Dim. : Ø 12,2 mm 
Pos. 3 Name: Socket plate Quantity: 1 	Pos. 8 Name: Washer Quantity: 2 Dim. : 65x50x8 mm 	Pos. 13 Name: Nut 8 B Quantity: 2 Dim. : M8 	Pos. 18 Name: Spring washer Quantity: 6 Dim. : Ø 10,2 mm 
Pos. 4 Name: Left bracket Quantity: 1 Dim. : 248x206x132 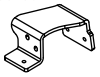	Pos. 9 Name: Bolt 8,8 B Quantity: 4 Dim. : M12x40mm 	Pos. 14 Name: Plain washer Quantity: 4 Dim. : Ø 13 mm 	Pos. 19 Name: Spring washer Quantity: 2 Dim. : Ø 8,2 mm 

PPUH AUTO-HAK Sp.J.

Produkcja Zaczepów Kulowych
Henryk & Zbigniew Nejman
76-200 SŁUPSK ul. Słoneczna 16K
tel/fax (059) 8-414-414; 8-414-413
E-mail: office@autohak.com.pl
www. autohak.com.pl

Towing hitch (without electrical set)

Class: **A50-X** Cat. no. **J47A**
Designed for:
Manufacturer: **HYUNDAI**
Model: **TRAJET (FO)**
produced since 2000

Technical data:
D-value: **10,75 kN**
maximum trailer weight: **1950 kg**
maximum vertical cup load: **80 kg**

Approval number according to Directive 94/20/EC: e20*94/20*1017*00

Foreword

This towbar is designed according to rules of safety traffic regulations. The towing hitch is a safety component and can be install only by qualified personnel. Any alteration or conversion of the towing hitch is prohibited and would lead to cancellation of design certification. Remove insulating compound and underseal from vehicle (if present) in the area of the matting surfaces of the towing hitch.
The vehicle manufacturer's specifications regarding trailer load and max. vertical cup load are decisive for driving, and values for the towing hitch cannot be exceeded.
D-value formula:

$$\frac{\text{Max trailer weight [kg]} \times \text{Max vehicle weight [kg]}}{\text{Max trailer weight [kg]} + \text{Max vehicle weight [kg]}} \times \frac{9{,}81}{1000} = D\ [\text{kN}]$$