FITTING INSTRCUTION

Clamp mark in acc. with		Cables joining
ISO	PN	
1	L	Left directional lights
2	+	Rear fog lights
3	31	Ground
4	R	Right directional lights
5	58R	Right side parking lights
6	54	Stoplights
7	58L	Left side parking lights

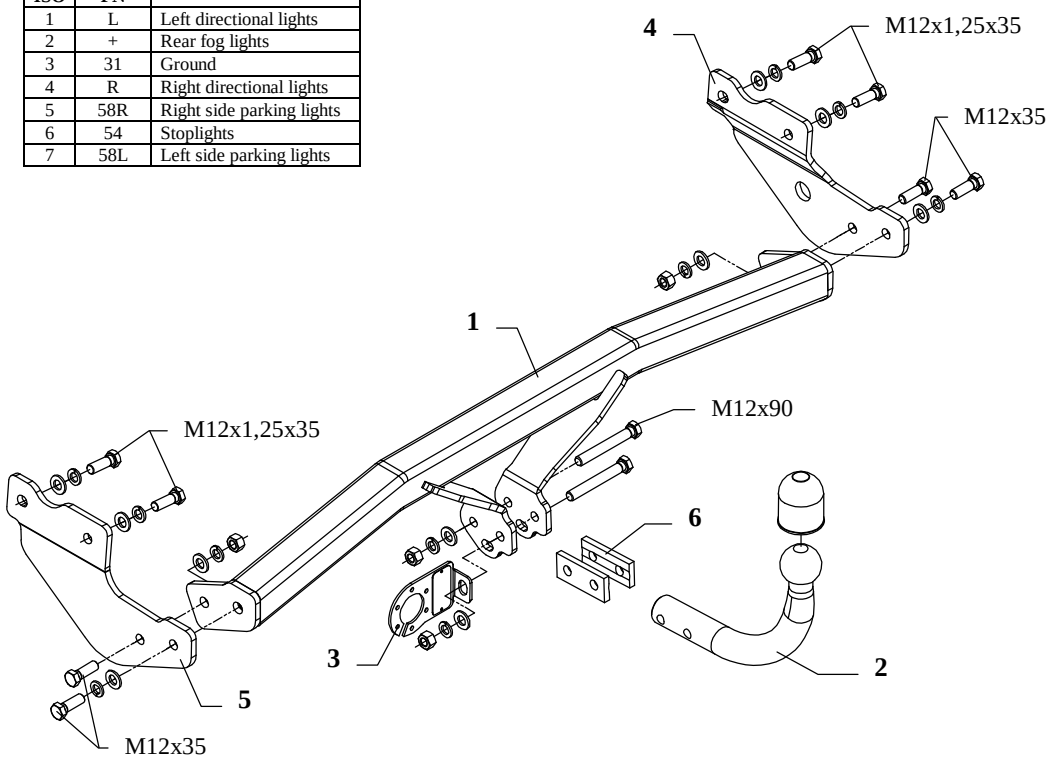

Fig. 1

This towbar is designed to assembly in following cars: **HYUNDAI GETZ,** produced since 2005, catalogue no. **J53** and is prepared to tow trailers max total weight **1100 kg** and max vertical load **44 kg**.

From manufacturer

Thank you for buying our product. Their reliability has been confirmed in many tests. Reliability of towbar depends also on correct assembly and right operation. For this reasons we kindly ask to read carefully this instruction and apply to hints.

The towbar should be install in points described by a car producer.

The instruction of the assembly

1. For the purpose of installings of the towbar one ought to disassemble the bumper, and then unscrew the plastic fulfilment from the bumper.
2. In the axis of the bumper make cut outs (see fig. 2).

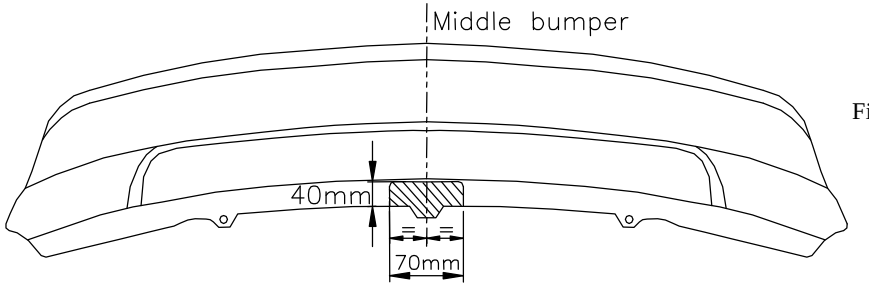

Fig. 2

3. Cut off the fragment from the plastic fulfilment (see fig. 3).
4. Fix the brackets of the towbar (pos. 4 and 5) to chassis members using bolts M12x1,25x35mm (pos. 9) – loosely (see fig. 1).
5. Slip the main bar of the towbar (pos. 1) between installed brackets (pos. 4 and 5) and fix using bolts M12x35mm (pos. 8).
6. Tighten all bolts according to the torque shown in the table.
7. Install the bumper with the plastic reinforcement.
8. Fix tow-ball (pos. 2) and socket plate (pos. 3) using bolts M12x90mm (pos. 7).
9. Connect electric wires of 7-poles socket according to the instruction of the car. (Recommend to make at authorized service station).
10. Complete paint layer damaged during installation.

Plastic fulfilment

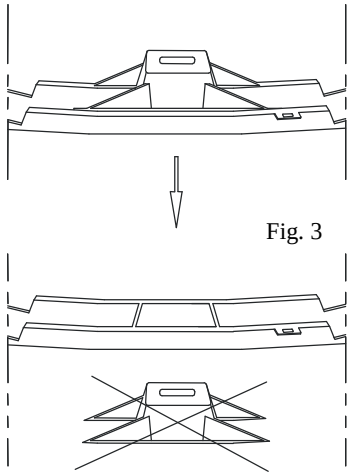

Fig. 3

Torque settings for nuts and bolts (8,8):	
M 8 - 25 Nm	**M 10 -** 55 Nm
M 12 - 85 Nm	**M 14 -** 135 Nm

NOTE

After install the towbar you should get adequate note in registration book (at authorised service station).The car should be equipped with:

- Indicators
- Tow mirrors

After 1000km check all bolts and nuts. The ball of towbar must be always kept clear and conserve with a grease.

Towbar accessories:

Pos. 1 — Name: Main bar — Quantity: 1 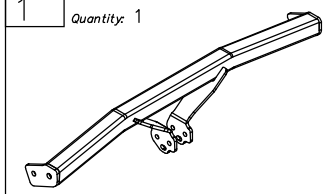	Pos. 4 — Name: Right bracket — Quantity: 1 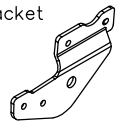	Pos. 9 — Name: Bolt 8,8 B — Quantity: 4 — Dim. : M12x1,25x35mm 
	Pos. 5 — Name: Left bracket — Quantity: 1 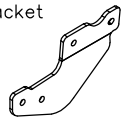	Pos. 10 — Name: Nut 8 B — Quantity: 4 — Dim. : M12 
Pos. 2 — Name: Tow ball — Quantity: 1 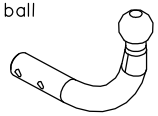	Pos. 6 — Name: Coverplate — Quantity: 2 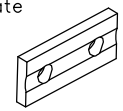	Pos. 11 — Name: Plain washer — Quantity: 10 — Dim. : ø 13 mm 
Pos. 3 — Name: Socket plate — Quantity: 1 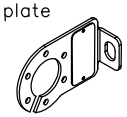	Pos. 7 — Name: Bolt 8,8 B — Quantity: 2 — Dim. : M12x90mm 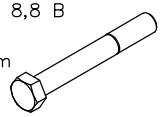	Pos. 12 — Name: Spring washer — Quantity: 10 — Dim. : ø 12,2 mm 
	Pos. 8 — Name: Bolt 8,8 B — Quantity: 4 — Dim. : M12x35mm 	Pos. 13 — Name: Ball cover — Quantity: 1 

PPUH AUTO-HAK S.J.

Produkcja Haków Holowniczych
Henryk & Zbigniew Nejman
76-200 SŁUPSK ul. Słoneczna 16K
tel/fax (059) 8-414-414; 8-414-413
E-mail: office@autohak.com.pl
www. autohak.com.pl

Towing hitch (without electrical set)

Class: **A50-X** Cat. no. **J53**
Manufacturer: **HYUNDAI**
Model: **GETZ**
produced since 2005

Technical data:
D-value: **6,5 kN**
maximum trailer weight: **1100 kg**
maximum vertical cup load: **44 kg**

Approval number according to Directive 94/20/EC: e20*94/20*0090*00

Foreword

This towbar is designed according to rules of safety traffic regulations. The towing hitch is a safety component and can be install only by qualified personnel. Any alteration or conversion of the towing hitch is prohibited and would lead to cancellation of design certification. Remove insulating compound and underseal from vehicle (if present) in the area of the matting surfaces of the towing hitch.
The vehicle manufacturer's specifications regarding trailer load and max. vertical cup load are decisive for driving whereat values for the towing hitch cannot be exceeded.
D-value formula:

$$\frac{\text{Max trailer weight [kg]} \times \text{Max vehicle weight [kg]}}{\text{Max trailer weight [kg]} + \text{Max vehicle weight [kg]}} \times \frac{9{,}81}{1000} = D\ [\text{kN}]$$