FITTING INSTRUCTION

Clamp mark in acc. with		Cables joining
ISO	PN	
1	L	Left directional lights
2	+	Rear fog lights
3	31	Ground
4	R	Right directional lights
5	58R	Right side parking lights
6	54	Stoplights
7	58L	Left side parking lights

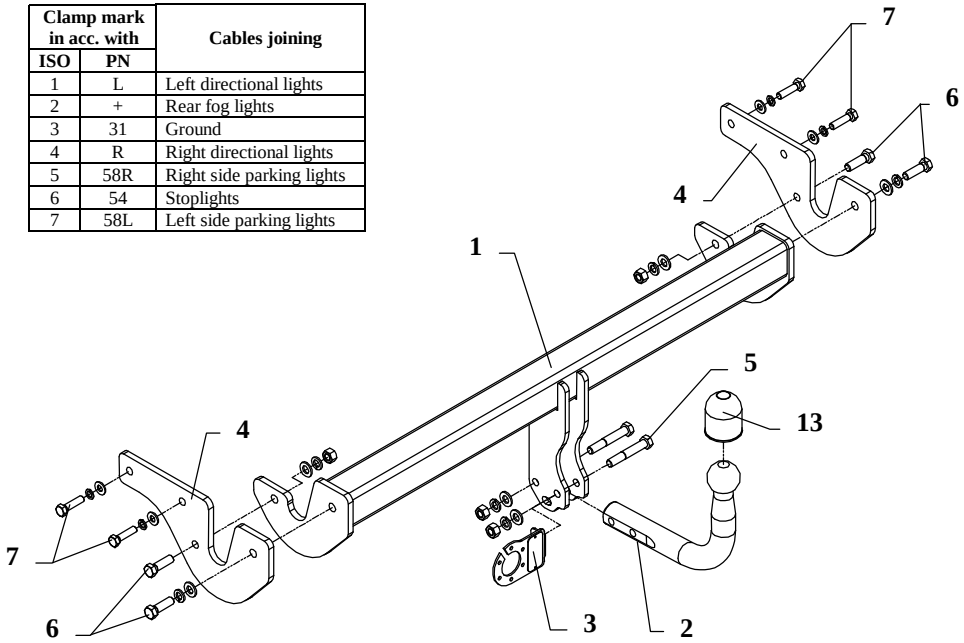

This towing hitch is designed to assembly in following cars: **HYUNDAI SONATA 4doors,** produced since 2005, catalogue no. **J51** and is prepared to tow trailers max total weight **1700** kg and max vertical load **75** kg.

From manufacturer

Thank you for buying our product. Their reliability has been confirmed in many tests. Reliability of towing hitch depends also on correct assembly and correct exploitation. For this reasons we kindly ask to read carefully this instruction and apply to hints.

The towing hitch should be install in points described by a car producer.

Assemble instruction

1. Disassemble the bumper and his reinforcement, in reinforcement cut out fragments as shown on figure 2 and 3.
2. Disassemble handles from reinforcement and make modifications according to figure 2.
3. Reassemble handles to the car (without reinforcement).
4. Underneath the car to left and right chassis member fix elements pos. 4 (in original threaded holes) using bolts M10x1,25x40mm (pos. 7), screw loosely.
5. To elements pos. 4 fix main bar of the towing hitch (pos. 1) using bolts M12x40mm (pos. 6).
6. Reassemble the reinforcement and the bumper .

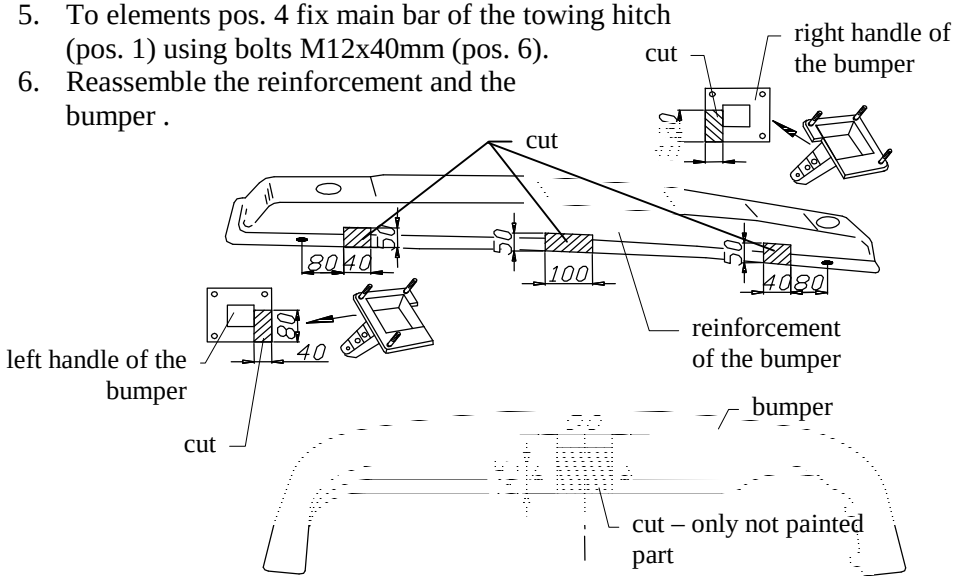

7. Fix tow-ball (pos. 2) and socket plate (pos. 3) using bolts M12x75mm (pos. 5) from accessories .
8. Screw tight all bolts according to the torque shown in the table.
9. Connect electric wires of 7-poles socket according to the instruction of the car. (Recommend to make at authorized service station)
10. Complete paint layer damaged during installation.

Torque settings for nuts and bolts (8,8):

M 8	25 Nm	**M 10**	55 Nm
M 12	85 Nm	**M 14**	135 Nm

NOTE

After install the towing hitch you should get adequate note in registration book (at authorised service station).The car should be equipped with:

- Indicators
- Tow mirrors

After 1000km check all bolts and nuts. The ball of towing hitch must be always kept clear and conserve with a grease.

Towing hitch accessories:

Pos. 1 — Name: Main bar — Quantity: 1 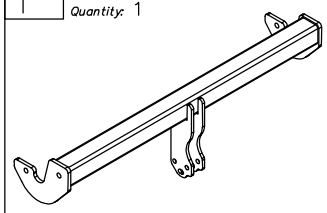	Pos. 5 — Name: Bolt 8,8 B — Quantity: 2 — Dim. : M12x75mm 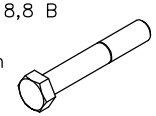	Pos. 10 — Name: Plain washer — Quantity: 4 — Dim. : ø 10,5 mm 
	Pos. 6 — Name: Bolt 8,8 B — Quantity: 4 — Dim. : M12x40mm 	Pos. 11 — Name: Spring washer — Quantity: 6 — Dim. : ø 12,2 mm 
Pos. 2 — Name: Tow ball — Quantity: 1 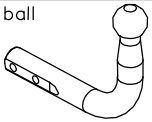	Pos. 7 — Name: Bolt 8,8 B — Quantity: 4 — Dim. : M10x1,25x40mm 	Pos. 12 — Name: Spring washer — Quantity: 4 — Dim. : ø 10,2 mm 
Pos. 3 — Name: Socket plate — Quantity: 1 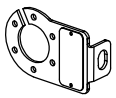	Pos. 8 — Name: Nut 8 B — Quantity: 4 — Dim. : M12 	Pos. 13 — Name: Ball cover — Quantity: 1 
Pos. 4 — Name: Bracket — Quantity: 2 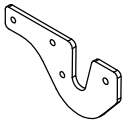	Pos. 9 — Name: Plain washer — Quantity: 6 — Dim. : ø 13 mm 	

PPUH AUTO-HAK S.J.

Produkcja Haków Holowniczych
Henryk & Zbigniew Nejman
76-200 SŁUPSK ul. Słoneczna 16K
tel/fax (059) 8-414-414; 8-414-413
E-mail: office@autohak.com.pl
www. autohak.com.pl

Towing hitch (without electrical set)

Class: **A50-X** Cat. no. **J51**
Designed for:
Manufacturer: **HYUNDAI**
Model: **SONATA**
Type: **4 doors**
produced since 2005

Technical data:
D-value: **9,07 kg**
maximum trailer weight: **1700 kg**
maximum vertical cup load: **75 kg**

Approval number acc. to regulations EKG/ONZ 55.01: E20-55R-01 1818

Foreword

This towing hitch is design according to rules of safety traffic regulations. The towing hitch is a safety component and must be installed only by qualified personnel. Any alteration or conversion to the towinh hitch is prohibited and would lead to cancellation of design certification. Remove insulating compound and underseal from vehicle (if present) in the area of the matting surfaces of the towing hitch.

The vehicle manufacturer's specifications regarding trailer load and max. vertical cup load are decisive for driving, and values for the towing hitch cannot be exceeded.

D-value formula:

$$\frac{\text{Max trailer weight [kg]} \times \text{Max vehicle weight [kg]}}{\text{Max trailer weight [kg]} + \text{Max vehicle weight [kg]}} \times \frac{9{,}81}{1000} = D\ [\text{kN}]$$