FITTING INSTRUCTION

Clamp mark in acc. with		Cables joining
ISO	PN	
1	L	Left directional lights
2	+	Rear fog lights
3	31	Ground
4	R	Right directional lights
5	58R	Right side parking lights
6	54	Stoplights
7	58L	Left side parking lights

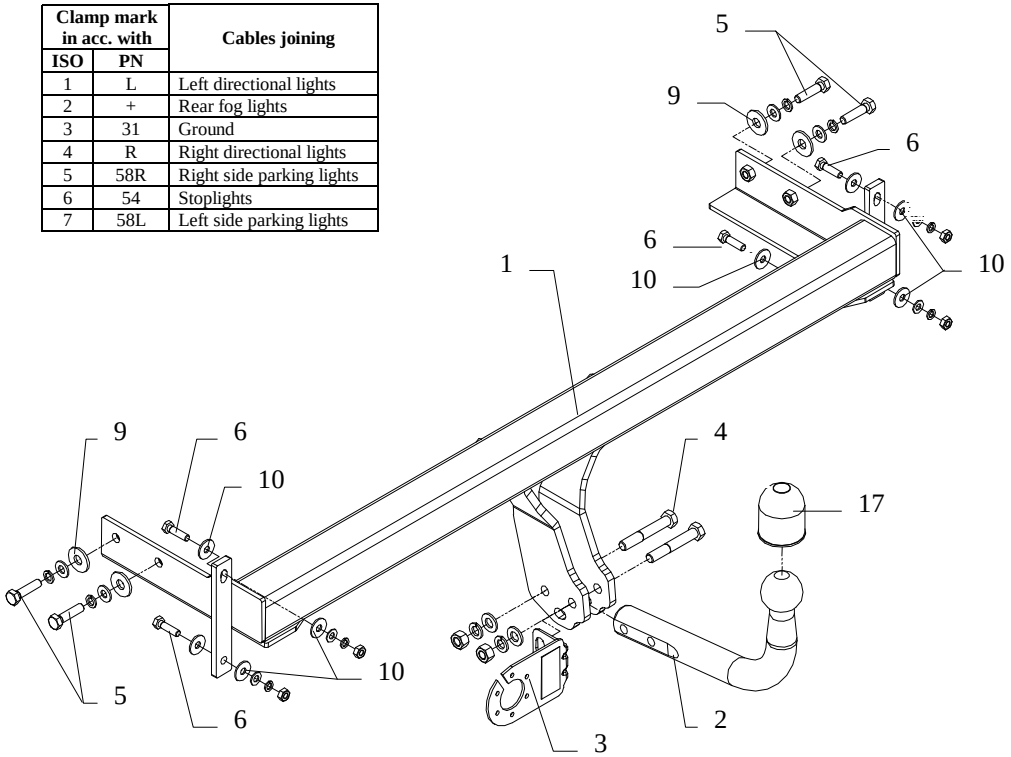

This towbar is designed to assembly in following cars: **HYUNDAI SONATA,** produced since 2001 till 2004, catalogue no. **J50** and is prepared to tow trailers max total weight **1700 kg** and max vertical load **75 kg**.

From manufacturer

Thank you for buying our product. Their reliability has been confirmed in many tests. Reliability of towbar depends also on correct assembly and correct exploitation. For this reasons we kindly ask to read carefully this instruction and apply to hints.

The towbar should be install in points described by a car producer.

Assemble instruction

1. Disassemble a rear bumper and his fulfillment, inclusive of brackets and central support (not used any more).
2. Fix fulfillment of the bumper (with brackets) to the main bar of the towbar (pos. 1) using bolts M8x30mm (pos. 6).
3. All unit put to the chassis members and fix using bolts M10x40mm (pos. 5).
4. Underneath the bumper cut fragment acc. to figure 2.

Fig. 2

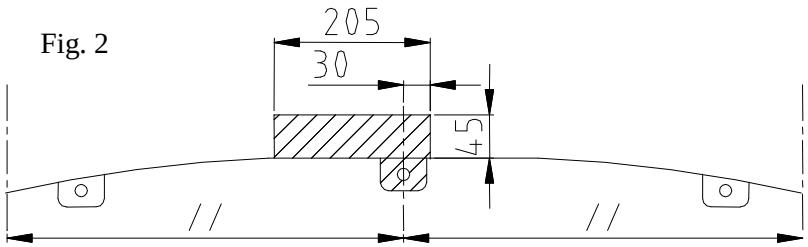

5. Reassemble the bumper.
6. Fix tow-ball (pos. 2) and socket plate (pos. 3) using bolts M12x75mm (pos. 4) from accessories.
7. Tighten all bolts according to the torque shown in the table.
8. Connect electric wires of 7-poles socket according to the instruction of the car. (Recommend to make at authorized service station)
9. Complete paint layer damaged during installation.

Torque settings for nuts and bolts (8,8):

M 8	25 Nm	**M 10**	55 Nm
M 12	85 Nm	**M 14**	135 Nm

NOTE

After install the towbar you should get adequate note in registration book (at authorised service station).The car should be equipped with:

- Indicators
- Tow mirrors

After 1000km check all bolts and nuts. The ball of towbar must be always kept clear and conserve with a grease.

Towbar accessories:

Pos. 1 Name: Main bar Quantity: 1 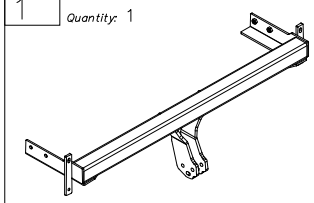	Pos. 6 Name: Bolt 8,8 B Quantity: 4 Dim. : M8x30mm 	Pos. 12 Name: Plain washer Quantity: 4 Dim. : ø 10,5 mm 
	Pos. 7 Name: Nut 8 B Quantity: 2 Dim. : M12 	Pos. 13 Name: Plain washer Quantity: 4 Dim. : ø 8,5 mm 
Pos. 2 Name: Tow ball Quantity: 1 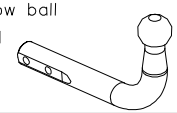	Pos. 8 Name: Nut 8 B Quantity: 4 Dim. : M8 	Pos. 14 Name: Spring washer Quantity: 2 Dim. : ø 12,2 mm 
Pos. 3 Name: Socket plate Quantity: 1 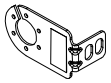	Pos. 9 Name: Washer Quantity: 4 Dim. : ø32xø12x3mm 	Pos. 15 Name: Spring washer Quantity: 4 Dim. : ø 10,2 mm 
Pos. 4 Name: Bolt 8,8 B Quantity: 2 Dim. : M12x75mm 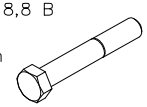	Pos. 10 Name: Washer Quantity: 8 Dim. : ø25xø9x2mm 	Pos. 16 Name: Spring washer Quantity: 4 Dim. : ø 8,2 mm 
Pos. 5 Name: Bolt 8,8 B Quantity: 4 Dim. : M10x40mm 	Pos. 11 Name: Plain washer Quantity: 2 Dim. : ø 13 mm 	Pos. 17 Name: Ball cover Quantity: 1 

PPUH AUTO-HAK S.J.

Produkcja Haków Holowniczych
Henryk & Zbigniew Nejman
76-200 SŁUPSK ul. Słoneczna 16K
tel/fax (059) 8-414-414; 8-414-413
E-mail: office@autohak.com.pl
www. autohak.com.pl

Towing hitch (without electrical set)

Class: **A50-X** Cat. no. **J50**
Designed for:
Manufacturer: **HYUNDAI**
Model: **SONATA**
produced since 2001 till 2004

Technical data:
D-value: **9,07 kg**
maximum trailer weight: **1700 kg**
maximum vertical cup load: **75 kg**

Approval number acc. to regulations EKG/ONZ 55.01: E20-55R-01 1770

Foreword

This towbar is design according to rules of safety traffic regulations. The towing hitch is a safety component and must be installed only by qualified personnel. Any alteration or conversion of the towing hitch is prohibited and would lead to cancellation of design certification. Remove insulating compound and underseal from vehicle (if present) in the area of the matting surfaces of the towing hitch.
The vehicle manufacturer's specifications regarding trailer load and max. vertical cup load are decisive for driving, and values for the towing hitch cannot be exceeded.
D-value formula:

$$\frac{\text{Max trailer weight [kg]} \times \text{Max vehicle weight [kg]}}{\text{Max trailer weight [kg]} + \text{Max vehicle weight [kg]}} \times \frac{9{,}81}{1000} = D\ [\text{kN}]$$