FITTING INSTRUCTION

Clamp mark in acc. with		Cables joining
ISO	PN	
1	L	Left directional lights
2	+	Rear fog lights
3	31	Ground
4	R	Right directional lights
5	58R	Right side parking lights
6	54	Stoplights
7	58L	Left side parking lights

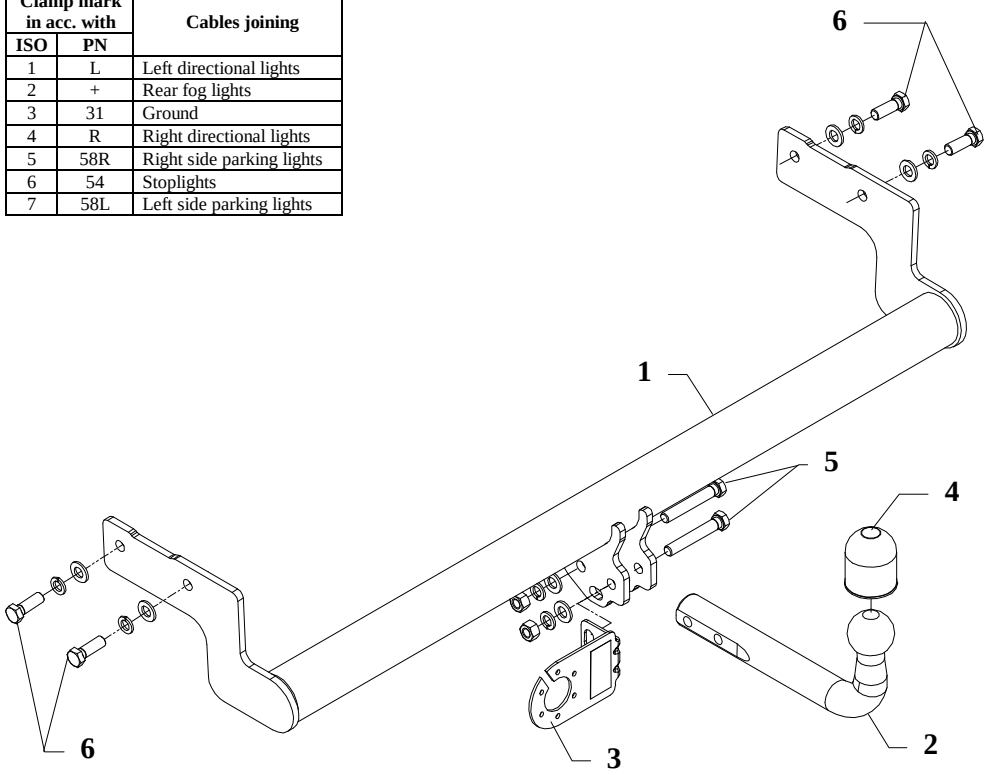

This towbar is designed to assembly in following car:
HYUNDAI ACCENT 3-5 doors, produced since 01.1996 till 12.1999, catalogue no. **J48** and is prepared to tow trailers max total weight **1400 kg** and max vertical load **60 kg**.

From manufacturer

Thank you for buying our product. Their reliability has been confirmed in many tests. Reliability of towbar depends also on correct assembly and right operation. For this reasons we kindly ask to read carefully this instruction and apply to hints.

The towbar should be install in points described by a car producer.

Fitting instructions

1. Put main bar of the towbar (pos. 1) to chassis members of the car and fix it by bolts M12x1,25x35mm (pos. 6) – loosely.
2. Fix tow-ball (pos. 2) and socket plate (pos. 3) using bolts M12x75mm (pos. 5) from accessories.
3. Tighten all bolts according to the torque shown in the table.
4. Connect electric wires of 7-poles socket according to the instruction of the car. (Recommend to make at authorized service station)
5. Complete paint layer damaged during installation.

Torque settings for nuts and bolts (8,8):	
M 8 - 25 Nm	**M 10** - 55 Nm
M 12 - 85 Nm	**M 14** - 135 Nm

NOTE

After install the towbar you should get adequate note in registration book (at authorised service station).The car should be equipped with:

- Indicators
- Tow mirrors

After 1000km check all bolts and nuts. The ball of towbar must be always kept clear and conserve with a grease.

Towbar accessories:

Pos. 1 — Name: Main bar — Quantity: 1 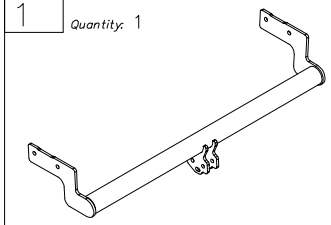	Pos. 4 — Name: Ball cover — Quantity: 1 	Pos. 8 — Name: Plain washer — Quantity: 6 — Dim. : ø 13 mm 
	Pos. 5 — Name: Bolt 8.8 B — Quantity: 2 — Dim. : M12x75mm 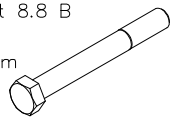	Pos. 9 — Name: Spring washer — Quantity: 6 — Dim. : ø 12,2 mm 
Pos. 2 — Name: Tow ball — Quantity: 1 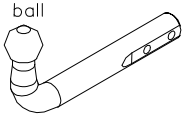	Pos. 6 — Name: Bolt 8.8 B — Quantity: 4 — Dim. : M12x1,25x35mm 	
Pos. 3 — Name: Socket plate — Quantity: 1 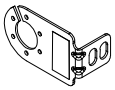	Pos. 7 — Name: Nut 8 B — Quantity: 2 — Dim. : M12 	

PPUH AUTO-HAK S. J.
Produkcja Haków Holowniczych
Henryk & Zbigniew Nejman
76-200 SŁUPSK ul. Słoneczna 16K
tel/fax (059) 8-414-414; 8-414-413
E-mail: office@autohak.com.pl
www.autohak.com.pl

Towing hitch (without electrical set)

Class: **A50-X** Cat. no. **J48**
Designed for:
Manufacturer: **HYUNDAI**
Model: **ACCENT**
Type**: 3-5 doors**
produced since 01.1996 till 12.1999

Technical data:
D-value: **7,0 kN**
maximum trailer weight: **1400 kg**
maximum vertical cup load: **60 kg**

Approval number acc. to regulations EKG/ONZ 55.01: E20-55R-01 1401

Foreword

This towbar is designed according to rules of safety traffic regulations. The towing hitch is a safety component and can be install only by qualified personnel. Any alteration or conversion of the towing hitch is prohibited and would lead to cancellation of design certification. Remove insulating compound and underseal from vehicle (if present) in the area of the matting surfaces of the towing hitch.
The vehicle manufacturer's specifications regarding trailer load and max. vertical cup load are decisive for driving, and values for the towing hitch cannot be exceeded.
D-value formula:

$$\frac{\text{Max trailer weight [kg]} \times \text{Max vehicle weight [kg]}}{\text{Max trailer weight [kg]} + \text{Max vehicle weight [kg]}} \times \frac{9{,}81}{1000} = D\ [\text{kN}]$$