FITTING INSTRUCTION

Clamp mark in acc. with		Cables joining
ISO	PN	
1	L	Left directional lights
2	+	Rear fog lights
3	31	Ground
4	R	Right directional lights
5	58R	Right side parking lights
6	54	Stoplights
7	58L	Left side parking lights

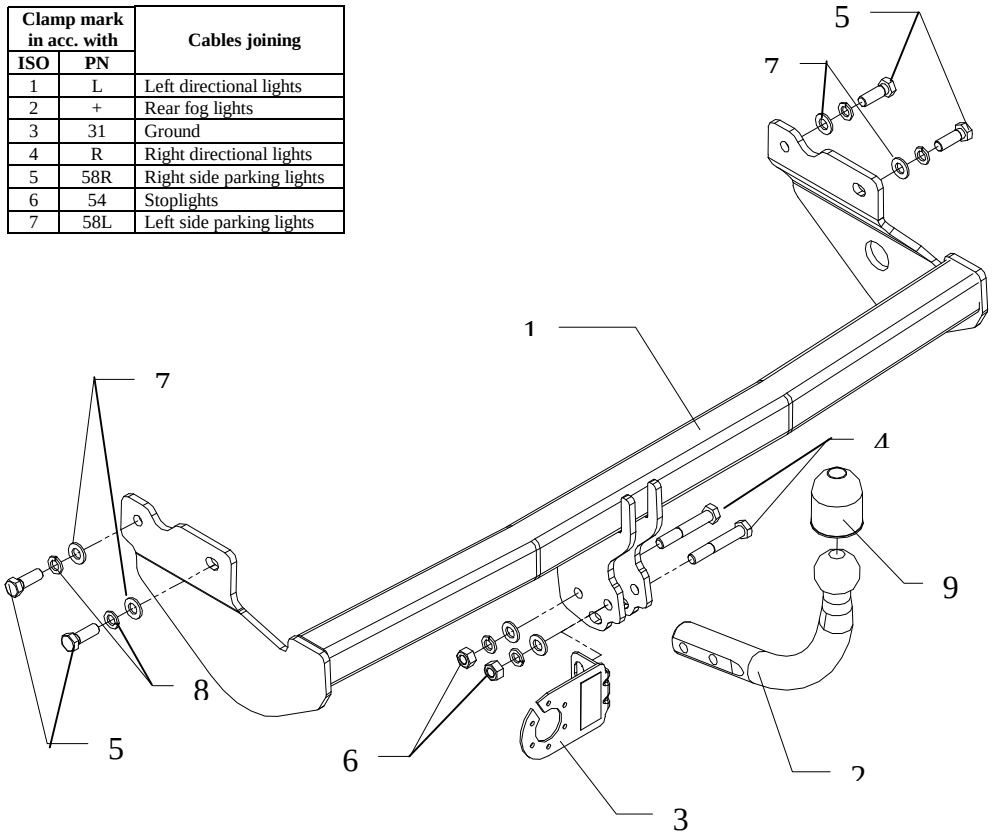

This towing hitch is designed to assembly in following car: **HYUNDAI GETZ,** produced since 2003 till 12.2004, catalogue number **J46** and is prepared to tow trailers max total weight **1100 kg** and max vertical load **50 kg**.

From manufacturer

Thank you for buying our product. Their reliability has been confirmed in many tests. Reliability of towing hitch depends also on correct assembly and right operation. For this reasons we kindly ask to read carefully this instruction and apply to hints.

The towing hitch should be installing in points described by a car producer.

Fitting instructions

1. Disassemble the bumper and its plastic filling
2. Position the towing hitch to the frame of the car (do it such way that the holes of the towing hitch cover original holes) and fix it using M12x1,25x35mm (pos. 5).
3. Disassemble the plastic filling after modifing it.
4. Disassemble the bumper after cutting it (see fig.2)
5. Position the ball of towing hitch (pos. 2) and the socket plate (pos. 3) and fix it with M12x75mm screws (pos. 4) from the towing hitch accessories.
6. Tighten all nuts and bolts according to the torque shown in the table.
7. Connect to the electric wires according to the instructions of the car.
8. Complete the paint cover of towing hitch (during the mounting paint cover could be destroyed).

Torque settings for nuts and bolts (8,8):

M 8	25 Nm	**M 10**	55 Nm
M 12	85 Nm	**M 14**	135 Nm

NOTE

After install the towing hitch you should get adequate note in registration book (at authorised service station).The car should be equipped with:

- Indicators
- Tow mirrors

After 1000km check all bolts and nuts. The ball of towing hitch must be always kept clear and conserve with a grease.

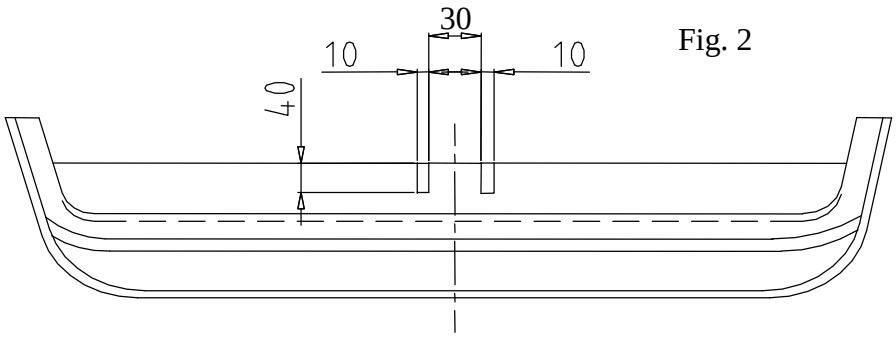

Fig. 2

Towing hitch accessories:

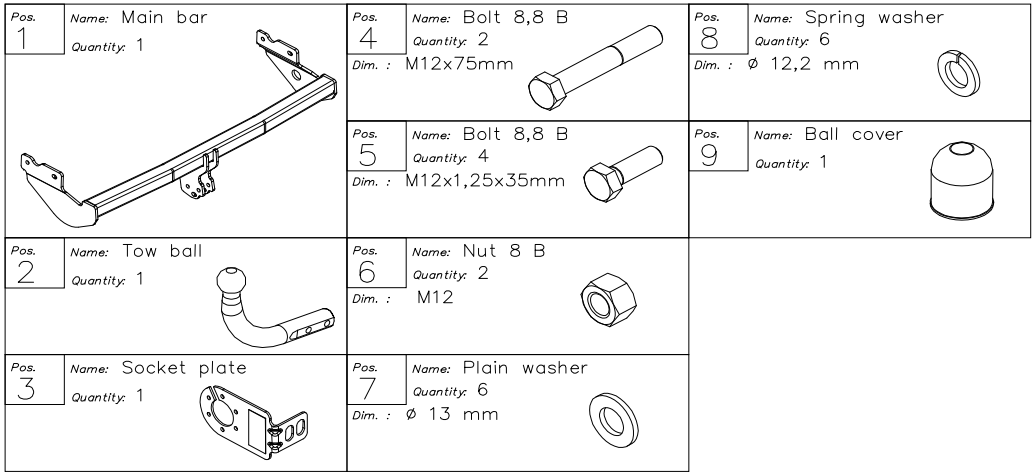

PPUH AUTO-HAK S. J.

Produkcja Haków Holowniczych
Henryk & Zbigniew Nejman
76-200 SŁUPSK ul. Słoneczna 16K
tel/fax (059) 8-414-414; 8-414-413
E-mail: office@autohak.com.pl
www.autohak.com.pl

Towing hitch (without electrical set)

Class: **A50-X** Cat. no. **J46**
Designed for:
Manufacturer: **HYUNDAI**
Model: **GETZ**
produced since 2003 till 12.2004

Technical data:
D-value: **6,70 kN**
maximum trailer weight: **1100 kg**
maximum vertical cup load: **50 kg**

Approval number acc. to regulations EKG/ONZ 55.01: E20-55R-01 0898

Foreword

This towing hitch is designed according to rules of safety traffic regulations. The towing hitch is a safety component and must be installed only by qualified personnel. Any alteration or conversion to the towinh hitch is prohibited and would lead to cancellation of design certification. Remove insulating compound and underseal from vehicle (if present) in the area of the matting surfaces of the towing hitch.

The vehicle manufacturer's specifications regarding trailer load and max. vertical cup load are decisive for driving, and values for the towing hitch must not be exceeded.

D-value formula:

$$\frac{\text{Max trailer weight [kg]} \times \text{Max vehicle weight [kg]}}{\text{Max trailer weight [kg]} + \text{Max vehicle weight [kg]}} \times \frac{9{,}81}{1000} = D\ [\text{kN}]$$