FITTING INSTRUCTION

Clamp mark in acc. with		Cables joining
ISO	PN	
1	L	Left directional lights
2	+	Rear fog lights
3	31	Ground
4	R	Right directional lights
5	58R	Right side parking lights
6	54	Stoplights
7	58L	Left side parking lights

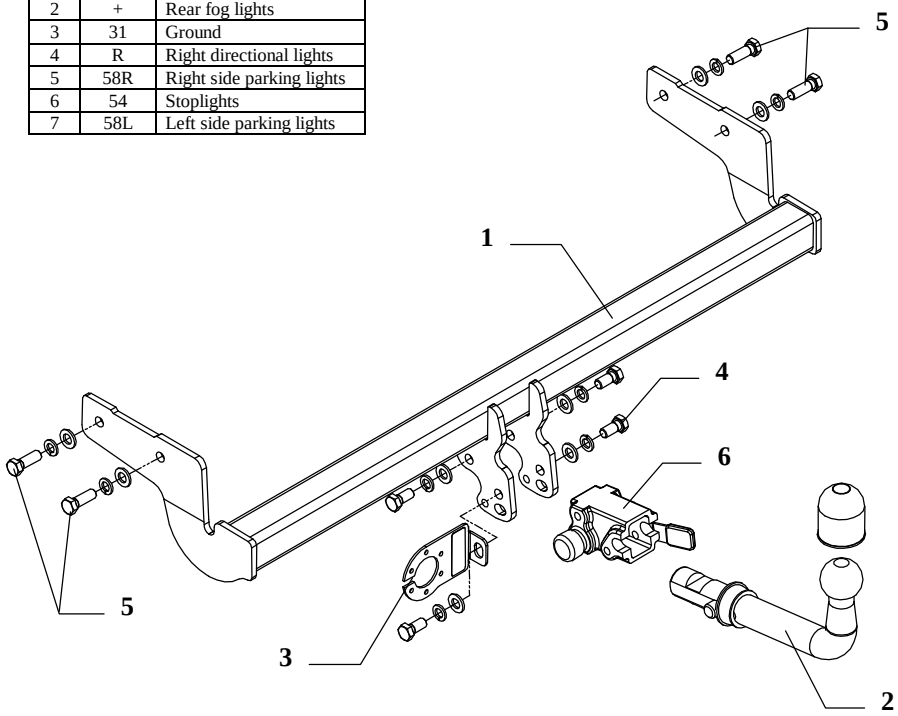

This towbar is designed to assembly in following cars: **HYUNDAI ACCENT 3-5 doors**, produced since 2000 till 06.2006, catalogue no. **J14A** and is prepared to tow trailers max total weight **1100 kg** and max vertical load **50 kg**.

From manufacturer

Thank you for buying our product. Their reliability has been confirmed in many tests. Reliability of towbar depends also on correct assembly and right operation. For this reasons we kindly ask to read carefully this instruction and apply to hints.

The towbar should be install in points described by a car producer.

The instruction of the assembly

1. Apply the main bar of the towbar (pos. 1) to the frame of the car and through holes (pos. A) fix it using bolts M12x1,25x35mm – pos. 5 (loosely).
2. Fix body of the automat (pos. 6) and the socket plate (pos. 3) using bolts M12x25mm (pos. 4) from accessories. Place tow-ball (pos. 2) according to supplied instruction.
3. Tighten all bolts according to the torque shown in the table.
4. Connect electric wires of 7-poles socket according to the instruction of the car. (Recommend to make at authorized service station).
5. Complete paint layer damaged during installation.

Torque settings for nuts and bolts (8,8):	
M 8 - 25 Nm	**M 10 -** 55 Nm
M 12 - 85 Nm	**M 14 -** 135 Nm

NOTE

After install the towbar you should get adequate note in registration book (at authorised service station).The car should be equipped with:

- Indicators
- Tow mirrors

Check all bolts and nuts after 1000km of exploitation. The ball of towbar must be always kept clear and conserve with a grease.

Towbar accessories:

Pos. 1 Main bar PCS.: 1 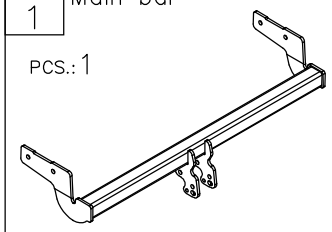	Pos. 4 Bolt 8,8 B M12x25mm PCS.: 4 	Pos. 8 Spring washer ø12mm PCS.: 8 
	Pos. 5 Bolt 8,8 B M12x1,25x35mm PCS.: 4 	Pos. 9 Ball cover PCS.: 1 
Pos. 2 Tow ball PCS.: 1 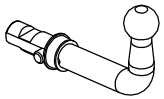	Pos. 6 Body of the automat PCS.: 1 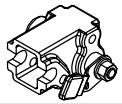	Pos. 10 Body plug PCS.: 1 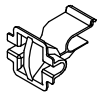
Pos. 3 Socket plate PCS.: 1 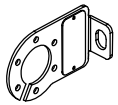	Pos. 7 Plain washer ø12mm PCS.: 8 	

PPUH AUTO-HAK S.J.

Produkcja Haków Holowniczych
Henryk & Zbigniew Nejman
76-200 SŁUPSK ul. Słoneczna 16K
tel/fax (059) 8-414-414; 8-414-413
email: office@autohak.com.pl
www. autohak.com.pl

Towing hitch (without electrical set)

Class: **A50-X** Cat. no. **J14A**
Designed for:
Manufacturer: **HYUNDAI**
Model: **ACCENT**
Type: **3-5doors**
produced since 2000 till 06.2006

Technical data:
D-value: **7,00 kN**
maximum trailer weight: **1100 kg**
maximum vertical cup load: **50 kg**

Approval number according to Directive 94/20/EC: e20*94/20*0416*00

Foreword

This towbar is designed according to rules of safety traffic regulations. The towing hitch is a safety component and can be install only by qualified personnel. Any alteration or conversion of the towing hitch is prohibited and would lead to cancellation of design certification. Remove insulating compound and underseal from vehicle (if present) in the area of the matting surfaces of the towing hitch.
The vehicle manufacturer's specifications regarding trailer load and max. vertical cup load are decisive for driving, and values for the towing hitch cannot be exceeded.
D-value formula:

$$\frac{\text{Max trailer weight [kg]} \times \text{Max vehicle weight [kg]}}{\text{Max trailer weight [kg]} + \text{Max vehicle weight [kg]}} \times \frac{9{,}81}{1000} = D\ [\text{kN}]$$