Towing hitch accessories:

Pos. 1 Main bar PCS.: 1 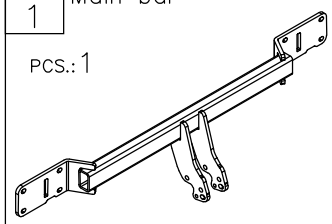	Pos. 4 Side bracket PCS.: 2 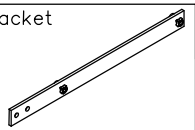	Pos. 8 Nut 8 B M10 PCS.: 12 
	Pos. 5 Bracket PCS.: 2 	Pos. 9 Washer ø30xø10.5x2.5mm PCS.: 16 
Pos. 2 Tow ball (mounting set) PCS.: 1 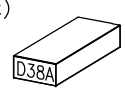	Pos. 6 Bolt 8.8 B M10x45mm PCS.: 12 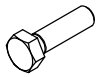	Pos. 10 Plain washer ø10mm PCS.: 12 
Pos. 3 Socket plate PCS.: 1 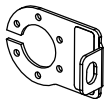	Pos. 7 Bolt 8.8 B M10x35mm PCS.: 4 	Pos. 11 Spring washer ø10mm PCS.: 16 

PPUH AUTO-HAK S.J.

Produkcja Zaczepów Kulowych
Henryk & Zbigniew Nejman
76-200 SŁUPSK ul. Słoneczna 16K
tel/fax (059) 8-414-414; 8-414-413
E-mail: office@autohak.com.pl
www.autohak.com.pl

Towing hitch (without electrical set)

Class: **A50-X** Cat. no. **D38A**
Designed for:
Manufacturer: **MERCEDES**
Model: **C-CLASS**
Type: **Sedan (W204)**
produced since 03.2007 and
Type: **Estate (S204)**
produced since 11.2007

Technical data:
D-value: **10,2 kN**
maximum trailer weight: **1800 kg**
maximum vertical cup mass: **100 kg**

Approval number according to Directive 94/20/EC: e20*94/20*0420*00

Foreword

This towing hitch is designed according to rules of safety traffic regulations. The towing hitch is a safety component and can be install only by qualified personnel. Any alteration or conversion of the towing hitch is prohibited and would lead to cancellation of design certification. Remove insulating compound and underseal from vehicle (if present) in the area of the matting surfaces of the towing hitch.
The vehicle manufacturer's specifications regarding trailer mass and max. vertical cup mass are decisive for driving whereat values for the towing hitch cannot be exceeded.
D-value formula:

$$\frac{\text{Max trailer weight [kg]} \times \text{Max vehicle weight [kg]}}{\text{Max trailer weight [kg]} + \text{Max vehicle weight [kg]}} \times \frac{9{,}81}{1000} = D\ [\text{kN}]$$

FITTING INSTRUCTION

Clamp mark in acc. with		Cables joining
ISO	PN	
1	L	Left directional lights
2	+	Rear fog lights
3	31	Ground
4	R	Right directional lights
5	58R	Right side parking lights
6	54	Stoplights
7	58L	Left side parking lights

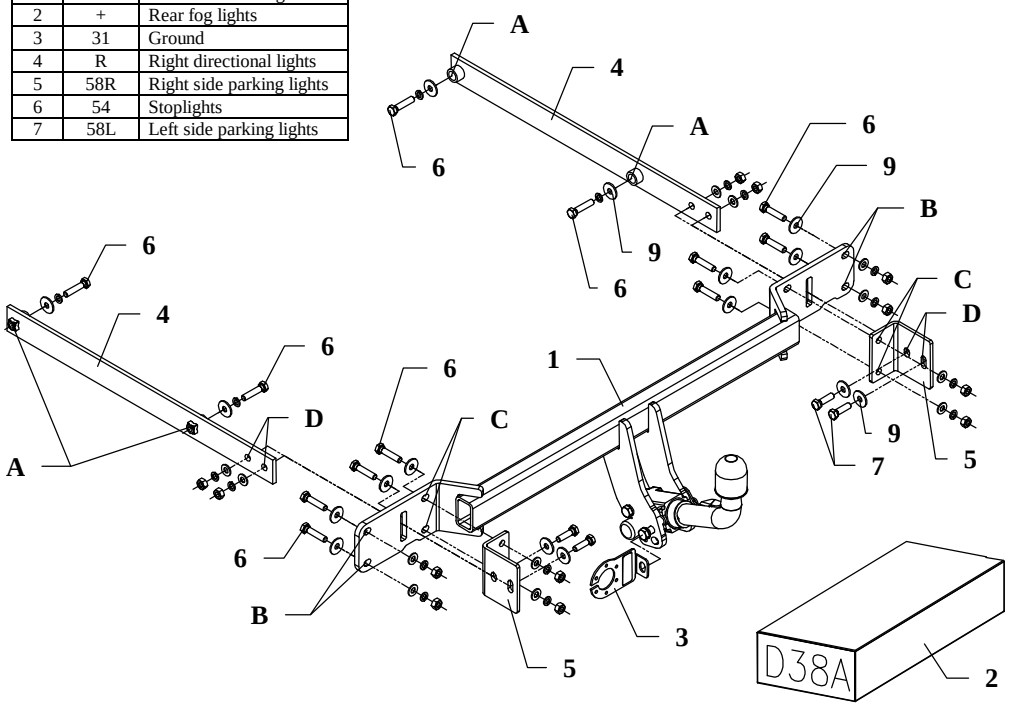

This towing hitch is designed to assembly in following cars: **MERCEDES C-CLASS SEDAN (W204)** produced since 03.2007 and **ESTATE (S204)** produced since 11.2007, catalogue number **D38A** and is prepared to tow trailers max total weight **1800 kg** and max vertical mass **100 kg**.

From manufacturer

Thank you for buying our product. Their reliability has been confirmed in many tests. Reliability of towing hitch depends also on correct assembly and right operation. For this reasons we kindly ask to read carefully this instruction and apply to hints.

The towing hitch should be install in points described by a car producer.

The instruction of the assembly

1. Remove the bumper and the metal reinforcement from the car. The reinforcement will not be assembled again.
2. Position side brackets (pos. 4) and fix them loosely through holes A using bolts M10x45mm (pos. 6), see the drawing.
3. Apply the main bar of the towing hitch (pos. 1) on the rear panel of the car and fix it loosely through holes B using bolts M10x45mm (pos. 6).
4. Fix brackets (pos. 5) to the main bar of the towing hitch (pos. 1) through holes C using bolts M10x45mm (pos. 6), see the drawing.
5. Fix side brackets (pos. 4) to brackets (pos. 5) through holes D using bolts M10x35mm (pos. 7).
6. Install the bumper after cut out a fragment on the underside of the middle of the bumper (80mm wide and 70mm deep).
7. Fix body of the automat and the socket plate (pos. 3) using bolts M12x25mm from accessories. Place tow-ball according to supplied instruction.
8. Tighten all bolts according to the torque shown in the table.
9. Connect electric wires of 7-poles socket according to the instruction of the car. (Recommend to make at authorized service station).
10. Complete paint layer damaged during installation.

Torque settings for nuts and bolts (8,8):	
M 8 - 25 Nm	**M 10 -** 55 Nm
M 12 - 85 Nm	**M 14 -** 135 Nm

NOTE

After install the towing hitch you should get adequate note in registration book (at authorised service station). The car should be equipped with:

- Indicators
- Tow mirrors

After 1000km of exploitation check all bolts and nuts. The ball of towing hitch must be always kept clear and conserve with a grease.