Towing hitch accessories:

Pos. 1 Main bar PCS.: 1 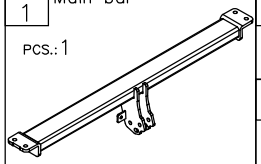	Pos. 6 Bolt 8,8 B M12x70mm PCS.: 2 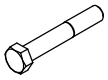	Pos. 12 Nut 8 B M8 PCS.: 1 	Pos. 18 Spring washer ø10mm PCS.: 4 
	Pos. 7 Bolt 8,8 B M12x45mm PCS.: 4 	Pos. 13 Washer ø30xø10,5x2,5mm PCS.: 4 	Pos. 19 Spring PCS.: 1 
Pos. 2 Tow ball PCS.: 1 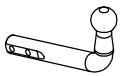	Pos. 8 Bolt 8,8 B M10x30mm PCS.: 4 	Pos. 14 Plain washer ø12mm PCS.: 6 	Pos. 20 Ball cover PCS.: 1 
Pos. 3 Socket plate PCS.: 1 	Pos. 9 Bolt 8,8 B M8x45mm PCS.: 1 	Pos. 15 Plain washer ø10mm PCS.: 4 	
Pos. 4 Right bracket PCS.: 1 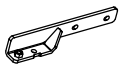	Pos. 10 Nut 8 B M12 PCS.: 4 	Pos. 16 Plain washer ø8mm PCS.: 2 	
Pos. 5 Left bracket PCS.: 1 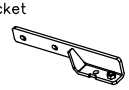	Pos. 11 Nut 8 B M10 PCS.: 4 	Pos. 17 Spring washer ø12mm PCS.: 6 	

PPUH AUTO-HAK S.J.

Produkcja Zaczepów Kulowych
Henryk & Zbigniew Nejman
76-200 SŁUPSK ul. Słoneczna 16K
tel/fax (059) 8-414-414; 8-414-413
E-mail: office@autohak.com.pl
www. autohak.com.pl

Towing hitch (without electrical set)

Class: **A50-X** Cat. no. **D31**
Designed for:
Manufacturer: **MERCEDES**
Model: **S210 CLASS E**
Type: **ESTATE**

produced since 1996 till 03.2002

Technical data:
D-value: **11,5 kg**
maximum trailer weight: **2300 kg**
maximum vertical cup load: **90 kg**

Approval number acc. to regulations EKG/ONZ 55.01:
E20-55R-01 1792

Foreword

This towing hitch is designed according to rules of safety traffic regulations. The towing hitch is a safety component and can be install only by qualified personnel. Any alteration or conversion of the towing hitch is prohibited and would lead to cancellation of design certification. Remove insulating compound and underseal from vehicle (if present) in the area of the matting surfaces of the towing hitch.
The vehicle manufacturer's specifications regarding trailer load and max. vertical cup load are decisive for driving, and values for the towing hitch cannot be exceeded.
D-value formula:

$$\frac{\text{Max trailer weight [kg]} \times \text{Max vehicle weight [kg]}}{\text{Max trailer weight [kg]} + \text{Max vehicle weight [kg]}} \times \frac{9{,}81}{1000} = D\ [\text{kN}]$$

FITTING INSTRUCTION

Clamp mark in acc. with		Cables joining
ISO	PN	
1	L	Left directional lights
2	+	Rear fog lights
3	31	Ground
4	R	Right directional lights
5	58R	Right side parking lights
6	54	Stoplights
7	58L	Left side parking lights

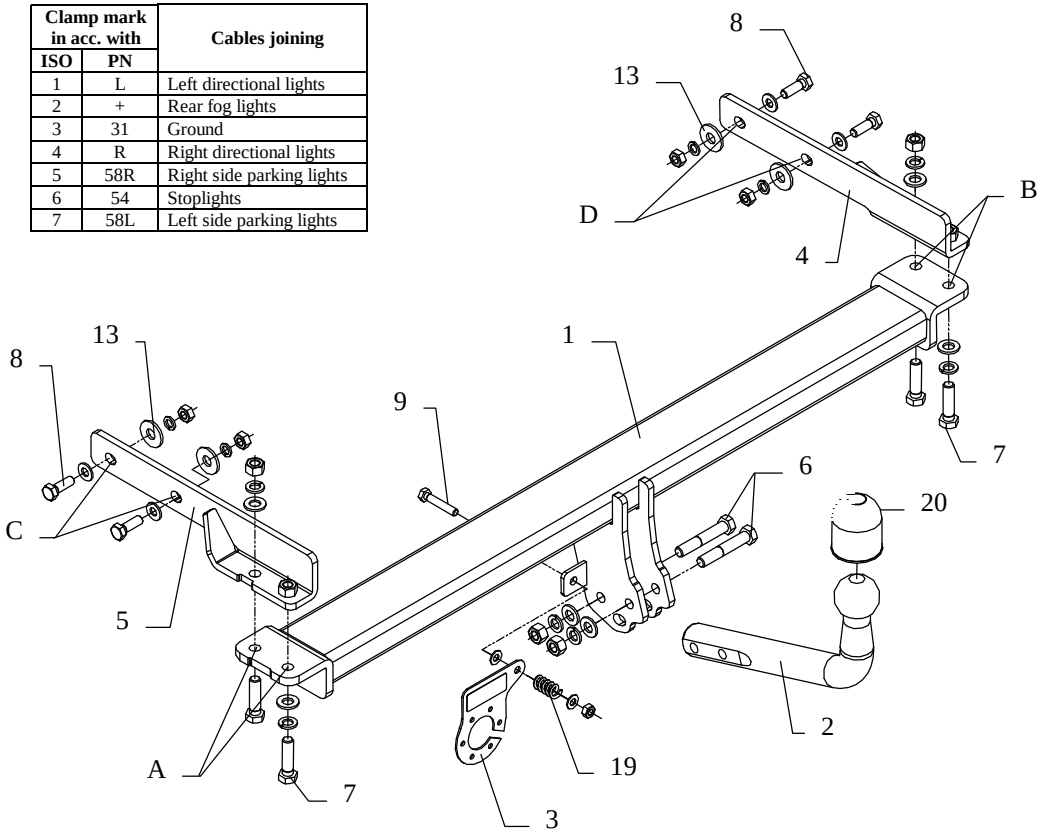

This towing hitch is designed to assembly in following cars: **MERCEDES S210 CLASS E, ESTATE,** produced since 1996 till 03.2002, catalogue no. **D31** and is prepared to tow trailers max total weight **2300 kg** and max vertical load **90 kg.**

From manufacturer

Thank you for buying our product. Their reliability has been confirmed in many tests. Reliability of towing hitch depends also on correct assembly and correct exploitation. For this reasons we kindly ask to read carefully this instruction and apply to hints.

The towing hitch should be install in points described by a car producer.

The instruction of the assembly

1. To install this towing hitch, make following actions:
   - remove all items from trunk
   - disassemble side covers
2. Find original marked holes on the left and right side of chassis (for better orientation You can put the main bar of the towing hitch), next drill holes A and B using bit ø15mm.
3. Place element (pos. 4) on the right side and (pos. 5) on the left side inside the trunk and fix it in points A and B by bolts M12x45mm (pos. 7), in points C and D by bolts M10x35mm (pos. 8).
4. Fix tow-ball (pos. 2) using bolts M12x70mm (pos. 6) from accessories and socket plate (pos. 3) by bolt M8x45mm (pos. 9).
5. Tighten all bolts according to the torque shown in the table.
6. Connect electric wires of 7-poles socket according to the instruction of the car. (Recommend to make at authorized service station)
7. Complete paint layer damaged during installation.

Torque settings for nuts and bolts (8,8):

M 8	25 Nm	**M 10**	55 Nm
M 12	85 Nm	**M 14**	135 Nm

NOTE

After install the towing hitch you should get adequate note in registration book (at authorized service station).The car should be equipped with:

- Indicators
- Tow mirrors

After 1000km check all bolts and nuts. The ball of towing hitch must be always kept clear and conserve with a grease.