FITTING INSTRUCTION

Clamp mark in acc. with		Cables joining
ISO	PN	
1	L	Left directional lights
2	+	Rear fog lights
3	31	Ground
4	R	Right directional lights
5	58R	Right side parking lights
6	54	Stoplights
7	58L	Left side parking lights

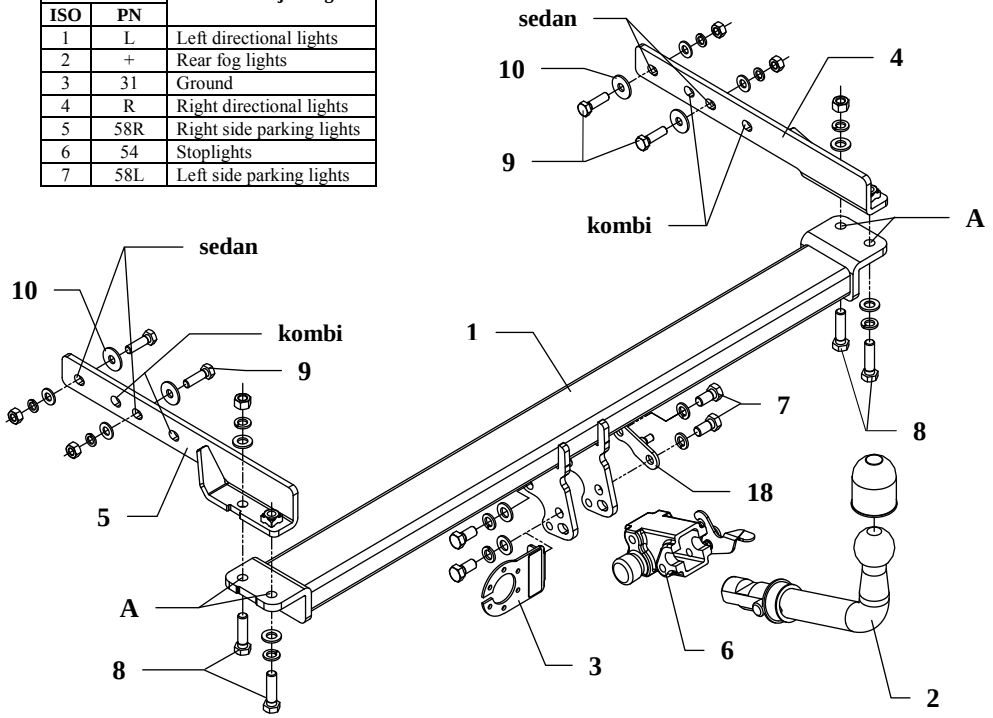

This towbar is designed to assembly in following car:
MERCEDES 124, 4 doors, Cabrio, Coupe, Estate produced since 1985 till 05.1995, catalogue no. **D02A** and is prepared to tow trailers max total weight **1900 kg** and max vertical load **75 kg.**

From manufacturer

Thank you for buying our product. Their reliability has been confirmed in many tests. Reliability of towbar depends also on correct assembly and right operation. For this reasons we kindly ask to read carefully this instruction and apply to hints.

The towbar should be install in points described by a car producer.

The instruction of the assembly

1. Disassemble the bumper, detach the muffler from bands and remove thermal shield over muffler.
2. Find factory marked points on left and right side of chassis and next drill holes (pos. A) with bit ø15mm.
3. To tunnels on the left and right side of spare wheel hollow put side brackets (pos. 4 and 5) and using bolts M12x45mm (pos. 8) fix it through made holes (pos. A) with main bar pos. 1 (main bar put underneath the car).
4. On the right side in spare wheel hollow are holes. Through this holes fix bracket using bolts M10x30mm (pos. 9) from accessories.
5. On the left side, in factory marked points drill holes through chassis using bit ø11mm (suitable to car's version) and next fix left bracket using bolts M10x30mm (pos. 9) from accessories.
6. Mount the thermal shield, the muffler and the rear bumper.
7. Fix body of the automat (pos. 6) and the socket plate (pos. 3) using bolts M12x25mm (pos. 7) from accessories. Place tow-ball (pos. 2) according to supplied instruction.
8. Tighten all bolts according to the torque shown in the table.
9. Connect electric wires of 7-pole socket according to the instruction of the car. (Recommend to make at authorized service station)
10. Complete paint layer damaged during installation.

Torque settings for nuts and bolts (8,8):		
M6 - 11 Nm	**M8** - 25 Nm	**M10** - 50 Nm
M12 - 87 Nm	**M14** - 138 Nm	**M16** - 210 Nm

NOTE

After install the towbar you should get adequate note in registration book (at authorised service station).The car should be equipped with:

- Indicators
- Tow mirrors

After 1000km of exploitation check all bolts and nuts. The ball of towbar must be always kept clear and conserve with a grease.

Towbar accessories:

Pos. 1 Main bar PCS.: 1 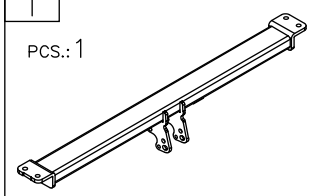	Pos. 6 Body of the automat PCS.: 1 	Pos. 13 Spring washer ø12,2mm PCS.: 8 
	Pos. 7 Bolt 8,8 B M12x25mm PCS.: 4 	Pos. 14 Spring washer ø10,2mm PCS.: 4 
Pos. 2 Tow ball PCS.: 1 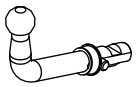	Pos. 8 Bolt 8,8 B M12x45mm PCS.: 4 	Pos. 15 Nut 8 B M12 PCS.: 2 
Pos. 3 Socket plate PCS.: 1 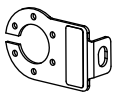	Pos. 9 Bolt 8,8 B M10x30mm PCS.: 4 	Pos. 16 Nut 8 B M10 PCS.: 4 
Pos. 4 Right bracket PCS.: 1 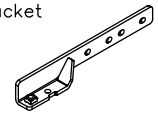	Pos. 10 Plain washer ø30xø10,5x2,5mm PCS.: 4 	Pos. 17 Ball's cover PCS.: 1 
Pos. 5 Left bracket PCS.: 1 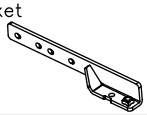	Pos. 11 Plain washer ø13mm PCS.: 6 	Pos. 18 Protection PCS.: 1 
	Pos. 12 Plain washer ø10,5mm PCS.: 4 	Pos. 19 Body plug PCS.: 1 

PPUH AUTO-HAK Sp.J.

Produkcja Zaczepów Kulowych
Henryk & Zbigniew Nejman
76-200 SŁUPSK ul. Słoneczna 16K
tel/fax (059) 8-414-414; 8-414-413
E-mail: office@autohak.com.pl
www. autohak.com.pl

Towing hitch (without electrical set)

Class: **A50-X** Cat. no. **D02A**
Designed for:
Manufacturer: **MERCEDES**
Model: **124**
Type: **4 doors, Cabrio, Coupe, Estate**
produced since 1985 till 05.1995

Technical data:
D-value: **9,8 kN**
maximum trailer weight: **1900 kg**
maximum vertical cup load: **75 kg**

Approval number according to Directive 94/20/EC: e20*94/20*1031*00

Foreword

This towbar is designed according to rules of safety traffic regulations. The towing hitch is a safety component and can be install only by qualified personnel. Any alteration or conversion of the towing hitch is prohibited and would lead to cancellation of design certification. Remove insulating compound and underseal from vehicle (if present) in the area of the matting surfaces of the towing hitch. The vehicle manufacturer's specifications regarding trailer load and max. vertical cup load are decisive for driving, and values for the towing hitch cannot be exceeded.

D-value formula:

$$\frac{\text{Max trailer weight [kg]} \times \text{Max vehicle weight [kg]}}{\text{Max trailer weight [kg]} + \text{Max vehicle weight [kg]}} \times \frac{9{,}81}{1000} = D\ [\text{kN}]$$