FITTING INSTRUCTION

Clamp mark in acc. with		Cables joining
ISO	PN	
1	L	Left directional lights
2	+	Rear fog lights
3	31	Ground
4	R	Right directional lights
5	58R	Right side parking lights
6	54	Stoplights
7	58L	Left side parking lights

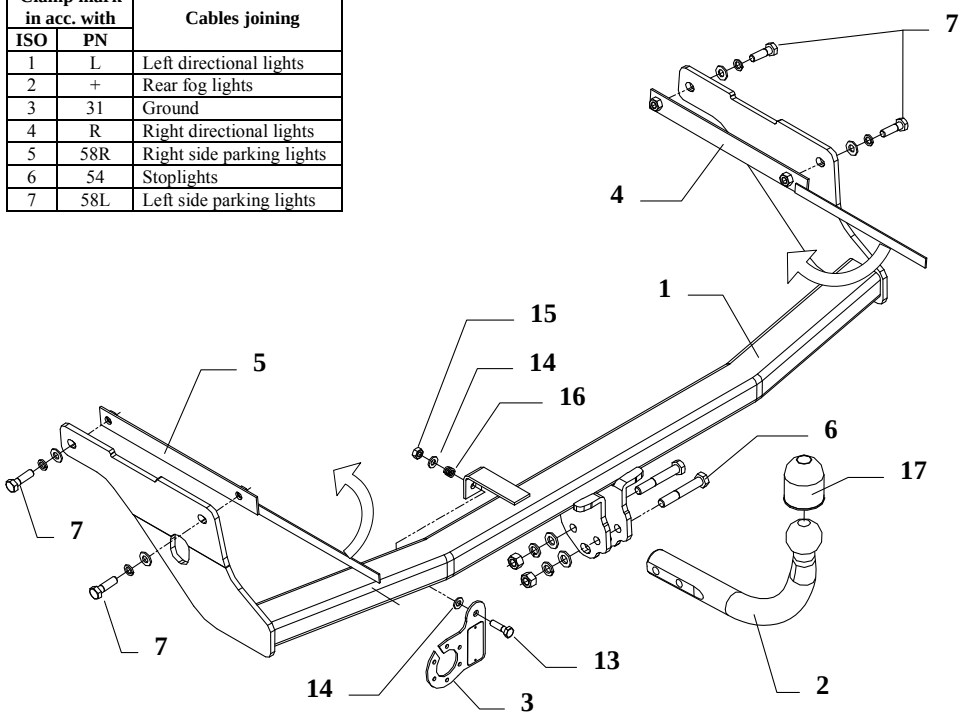

This towbar is designed to assembly in following cars:
FORD FOCUS ESTATE produced since 03.2005 till 04.2011, catalogue number **C47** and is prepared to tow trailers max total weight **1500 kg** and max vertical load **75 kg.**

From manufacturer

Thank you for buying our product. Their reliability has been confirmed in many tests. Reliability of towbar depends also on correct assembly and right exploit. For this reasons we kindly ask to read carefully this instruction and apply to hints.

The towbar should be install in points described by a car producer.

Fitting instructions

1. Disassemble bumper and metal reinforcement. Reinforcement will be not used any more.
2. To chassis members put main bar of the towbar (pos. 1) in this way, so holes in towbar tally with original holes in chassis members. Fix by four bolts M10x40mm (pos. 7) and using jibs with nuts (pos. 4 and 5)
3. Tighten all bolts according to the torque shown in the table.
4. Ends of jibs with nuts (pos. 4 and 5), thinnest sheet, bend inside the car center – see drawing.
5. Reassemble the bumper.
6. Fix socket plate (pos. 3) according to drawing.
7. Fix tow-ball (pos. 2) using bolts M12x75mm (pos. 6) from accessories.
8. Connect electric wires of 7-poles socket according to the instruction of the car. (Recommend to make at authorized service station)
9. Complete paint layer damaged during installation.

Torque settings for nuts and bolts (8,8):

M 8	25 Nm	**M 10**	55 Nm
M 12	85 Nm	**M 14**	135 Nm

NOTE

After install the towbar you should get adequate note in registration book (at authorised service station).The car should be equipped with:

- Indicators
- Tow mirrors

After 1000km check all bolts and nuts. The ball of towbar must be always kept clear and conserve with a grease.

Towbar accessories:

Pos. 1 Name: Main bar Quantity: 1 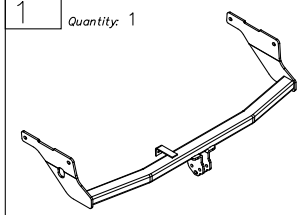	Pos. 6 Name: Bolt 8,8 B Quantity: 2 Dim. : M12x75mm 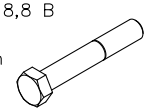	Pos. 12 Name: Spring washer Quantity: 4 Dim. : ø 10,2 mm 
	Pos. 7 Name: Bolt 8,8 B Quantity: 4 Dim. : M10x40mm 	Pos. 13 Name: Bolt 8,8 B Quantity: 1 Dim. : M8x30mm 
Pos. 2 Name: Tow-ball Quantity: 1 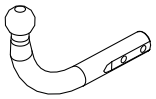	Pos. 8 Name: Nut 8 B Quantity: 2 Dim. : M12 	Pos. 14 Name: Plain washer Quantity: 2 Dim. : ø 8,5 mm 
Pos. 3 Name: Socket plate Quantity: 1 	Pos. 9 Name: Plain washer Quantity: 2 Dim. : ø 13 mm 	Pos. 15 Name: Nut 8 B Quantity: 1 Dim. : M 8 
Pos. 4 Name: Right jib Quantity: 1 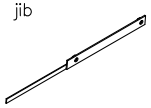	Pos. 10 Name: Plain washer Quantity: 4 Dim. : ø 10,5 mm 	Pos. 16 Name: Spring Quantity: 1 
Pos. 5 Name: Left jib Quantity: 1 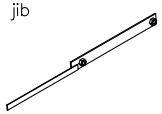	Pos. 11 Name: Spring washer Quantity: 2 Dim. : ø 12,2 mm 	Pos. 17 Name: Ball cover Quantity: 1 

PPUH AUTO-HAK S.J.

Produkcja Haków Holowniczych
Henryk & Zbigniew Nejman
76-200 SŁUPSK ul. Słoneczna 16K
tel/fax (059) 8-414-414; 8-414-413
E-mail: office@autohak.com.pl
www. autohak.com.pl

Towing hitch (without electrical set)

Class: **A50-X** Cat. no. **C47**
Designed for:
Manufacturer: **FORD**
Model: **FOCUS**
Type: **ESTATE**
produced since 03.2005 till 04.2011

Technical data:
D-value: **8,50 kN**
maximum trailer weight: **1500 kg**
maximum vertical cup load: **75 kg**

Approval number according to Directive 94/20/EC: e20*94/20*0218*00

Foreword

This towbar is design according to rules of safety traffic regulations. The towing hitch is a safety component and must be installed only by qualified personnel. Any alteration or conversion to the towinh hitch is prohibited and would lead to cancellation of design certification. Remove insulating compound and underseal from vehicle (if present) in the area of the matting surfaces of the towing hitch.
The vehicle manufacturer's specifications regarding trailer load and max. vertical cup load are decisive for driving, and values for the towing hitch cannot be exceeded.
D-value formula:

$$\frac{\text{Max trailer weight [kg]} \times \text{Max vehicle weight [kg]}}{\text{Max trailer weight [kg]} + \text{Max vehicle weight [kg]}} \times \frac{9{,}81}{1000} = D\ [\text{kN}]$$