## FITTING INSTRUCTION

| Clamp mark in acc. with | | Cables joining |
|---|---|---|
| ISO | PN | |
| 1 | L | Left directional lights |
| 2 | + | Rear fog lights |
| 3 | 31 | Ground |
| 4 | R | Right directional lights |
| 5 | 58R | Right side parking lights |
| 6 | 54 | Stoplights |
| 7 | 58L | Left side parking lights |

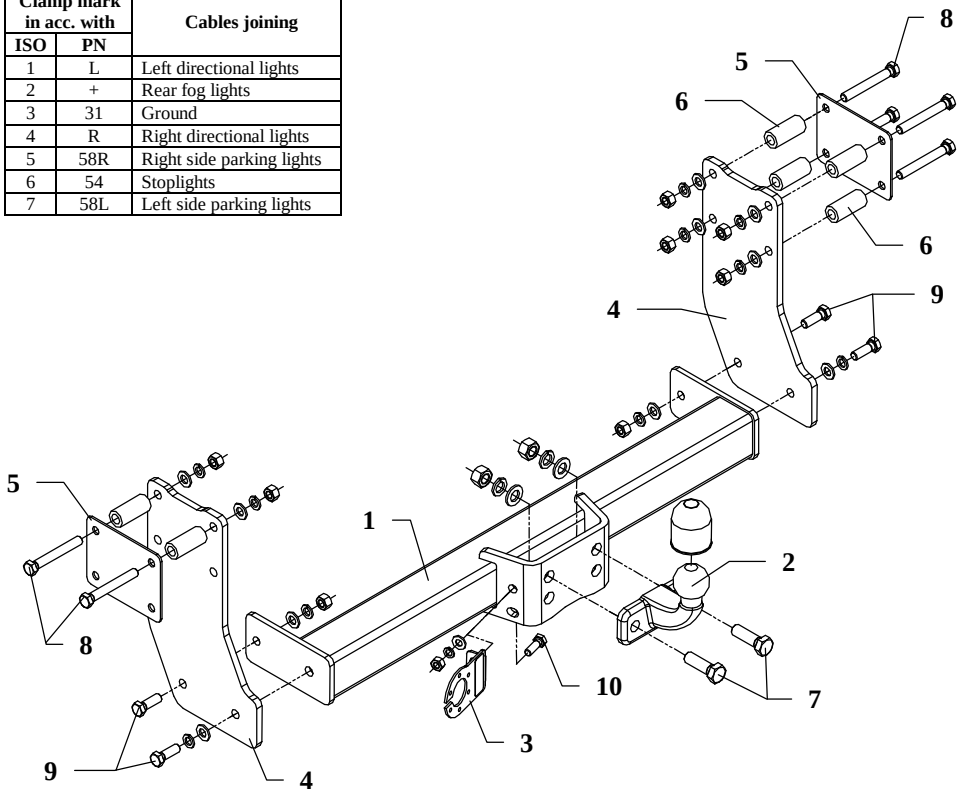


This towing hitch is designed to assembly in following cars: **FORD TRANSIT, loading platform, double wheel,** produced since 05.2000, catalogue no. **C37** and is prepared to tow trailers max total weight **2800 kg** and max vertical mass **112 kg**.

### *From manufacturer*

Thank you for buying our product. Their reliability has been confirmed in many tests. Reliability of towing hitch depends also on correct assembly and right operation. For this reasons we kindly ask to read carefully this instruction and apply to hints.

*The towing hitch should be install in points described by a car producer.*

## The instruction of the assembly

1. Disassemble the back panel, whereon are fixed lamps.
2. Slip distance sleeves ø25x5, L=55mm (pos. 6) into the frame in that way, so they overlap on the factory-made holes, apply fish-plates (pos. 5) from the outside of the frame and fix using bolts M12x90mm (pos. 8) as it shown on the drawing.
3. Apply side brackets (pos. 4) and fix (loosely).
4. Between side brackets (pos. 4) slip the main bar of the towing hitch (pos. 1) and fix using bolts M12x35mm (pos. 9).
5. Fix tow-ball (pos. 2) using bolts M16x50mm (pos. 7) from accessories.
6. Fix socket plate (pos. 3) using bolts M10x30mm (pos. 10).
7. Tighten all bolts according to the torque shown in the table.
8. Connect electric wires of 7-poles socket according to the instruction of the car. (Recommend to make at authorized service station).
9. Complete paint layer damaged during installation.

| Torque settings for nuts and bolts (8,8): | | |
|---|---|---|
| **M6 -** 11 Nm | **M8 -** 25 Nm | **M10 -** 50 Nm |
| **M12 -** 87 Nm | **M14 -** 138 Nm | **M16 -** 210 Nm |

### NOTE

After install the towing hitch you should get adequate note in registration book (at authorised service station). The car should be equipped with:

- Indicators
- Tow mirrors

After 1000km check all bolts and nuts. The ball of towing hitch must be always kept clear and conserve with a grease.

Towing hitch accessories:

| | | | |
|---|---|---|---|
| Pos. 1 Main bar<br>PCS.: 1 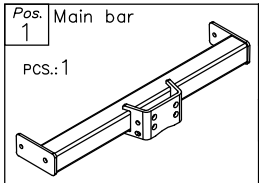 | Pos. 5 Plate<br>PCS.: 2  | Pos. 10 Bolt 8,8 B M10x30mm<br>PCS.: 1  | Pos. 15 Plain washer ø12mm<br>PCS.: 10  |
| | Pos. 6 Distance sleeve ø25x5mm L=55mm<br>PCS.: 6  | Pos. 11 Nut 8 B M16<br>PCS.: 2  | Pos. 16 Plain washer ø10mm<br>PCS.: 1  |
| Pos. 2 Tow ball<br>PCS.: 1  | Pos. 7 Bolt 8,8 B M16x50mm<br>PCS.: 2  | Pos. 12 Nut 8 B M12<br>PCS.: 8  | Pos. 17 Spring washer ø16,3mm<br>PCS.: 2  |
| Pos. 3 Socket plate<br>PCS.: 1  | Pos. 8 Bolt 8,8 B M12x90mm<br>PCS.: 6 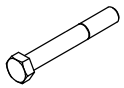 | Pos. 13 Nut 8 B M10<br>PCS.: 1  | Pos. 18 Spring washer ø12mm<br>PCS.: 10  |
| Pos. 4 Side bracket<br>PCS.: 2  | Pos. 9 Bolt 8,8 B M12x35mm<br>PCS.: 4  | Pos. 14 Plain washer ø17mm<br>PCS.: 2  | Pos. 19 Spring washer ø10mm<br>PCS.: 1  |
| | | | Pos. 20 Ball cover<br>PCS.: 1  |


**PPUH AUTO-HAK S.J.**

Produkcja Zaczepów Kulowych
Henryk & Zbigniew Nejman
76-200 SŁUPSK ul. Słoneczna 16K
tel/fax (059) 8-414-414; 8-414-413
E-mail: office@autohak.com.pl
www.autohak.com.pl


# Towing hitch (without electrical set)

Class: **A50-X** Cat. no. **C37**
Designed for:
Manufacturer: **FORD**
Model: **TRANSIT**
Type: **loading platform, double wheel**
produced since 05.2000

Technical data:
**D**-value: **14,71 kN**
maximum trailer weight: **2800 kg**
maximum vertical cup mass: **112 kg**

**Approval number according to Directive 94/20/EC: e20*94/20*0493*00**

## *Foreword*

This towing hitch is designed according to rules of safety traffic regulations. The towing hitch is a safety component and can be install only by qualified personnel. Any alteration or conversion of the towing hitch is prohibited and would lead to cancellation of design certification. Remove insulating compound and underseal from vehicle (if present) in the area of the matting surfaces of the towing hitch.
The vehicle manufacturer's specifications regarding trailer mass and max. vertical cup mass are decisive for driving whereat values for the towing hitch cannot be exceeded.
*D-value formula:*

$$\frac{\text{Max trailer weight [kg]} \times \text{Max vehicle weight [kg]}}{\text{Max trailer weight [kg]} + \text{Max vehicle weight [kg]}} \times \frac{9{,}81}{1000} = D\ [\text{kN}]$$