FITTING INSTRUCTION

Clamp mark in acc. with		Cables joining
ISO	PN	
1	L	Left directional lights
2	+	Rear fog lights
3	31	Ground
4	R	Right directional lights
5	58R	Right side parking lights
6	54	Stoplights
7	58L	Left side parking lights

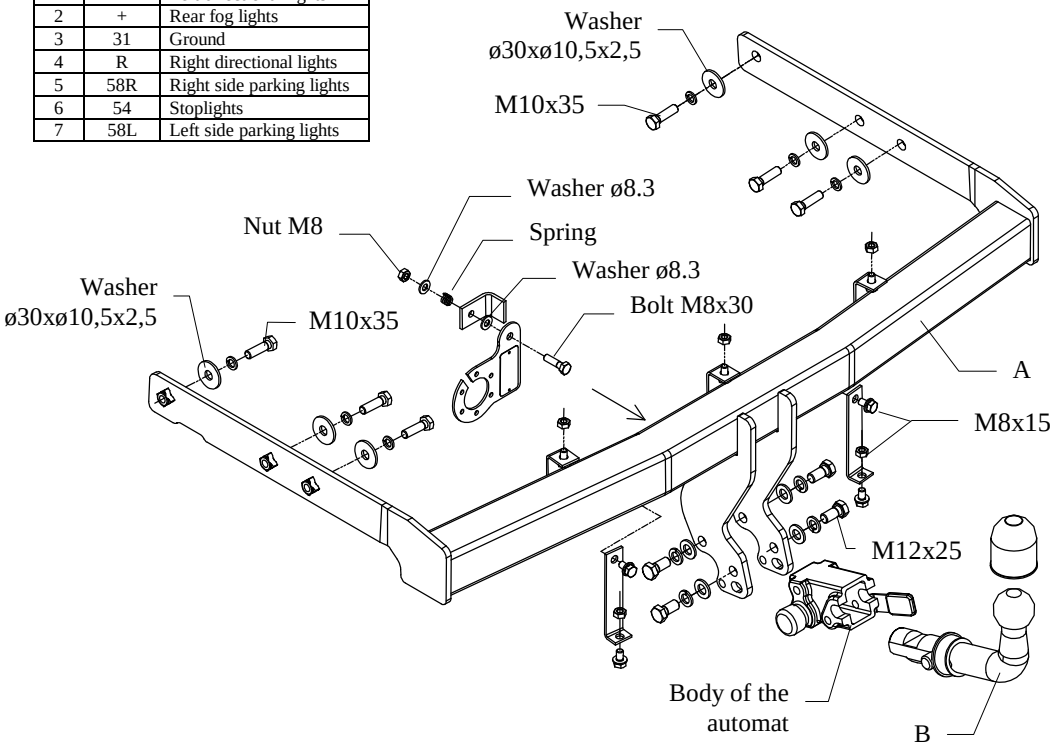

This towbar is designed to assembly in following cars: **FORD GALAXY** produced since 1995 till 05.2000; **VW SHARAN** produced since 1995 till 04.2000; **SEAT ALHAMBRA** produced since 1996 till 04.2000, catalogue no. **C33A** and is prepared to tow trailers max total weight **2100kg** and max vertical mass **85kg.**

From manufacturer

Thank you for buying our product. Their reliability has been confirmed in many tests. Reliability of towbar depends also on correct assembly and right operation. For this reasons we kindly ask to read carefully this instruction and apply to hints.

The towbar should be install in points described by a car producer.

The instruction of the assembly

1. Take out spare wheel, disassemble a bumper and next disassemble heat cover.
2. Disassemble a filler of the bumper (not used any more). Cut out fragment of bumper – in lower part, 80x25mm in its axis.
3. At towbar handles fix a bumper with boltsM8x15mm.
4. Slip main bar of towbar (pos. A) with bumper into chassis members and next fix all with bolts M10x35mm and washers ø30xø10,5x2,5mm (from accessories).
5. Mount heat cover.
6. Fix body of the automat using bolts M12x25mm from accessories. Place tow-ball (pos. B) according to supplied instruction.
7. Fix socket plate according to drawing by bolt M8.
8. Fix all bolts according to the torque shown in the table.
9. Connect the electric wires according to the instruction of the car. (Recommend to make at service station)
10. Supplement the paint coating damaged during assembly.

Torque settings for nuts and bolts 8,8 :

M 8 - 25 Nm **M 10 -** 55 Nm

M 12 - 85 Nm **M 14 -** 135 Nm

NOTE

After install the towbar you should get adequate note in registration book (at authorised service station). The car should be equipped with:

- Indicators
- Tow mirrors

After 1000km of exploitation check all bolts and nuts. The ball of towbar must be always kept clear and conserve with a grease.

PPUH AUTO-HAK S. J.

Produkcja Zaczepów Kulowych
Henryk & Zbigniew Nejman
76-200 SŁUPSK ul. Słoneczna 16K
tel/fax (059) 8-414-414; 8-414-413
E-mail: office@autohak.com.pl
www.autohak.com.pl

Towing hitch (without electrical set)

Class: **A50-X** Cat. no. **C33A**
Designed for:
Ford Galaxy prod. since 1995 till 05.2000
VW Sharan prod. since 1995 till 04.2000
Seat Alhambra prod. since 1996 till 04.2000

Technical data:
D-value: **11,09 kN**
maximum trailer weight: **2100 kg**
maximum vertical cup load: **85 kg**

Approval number acc. to regulations EKG/ONZ 55.01: E20-55R-01 1113

Foreword

This towbar is designed according to rules of safety traffic regulations. The towing hitch is a safety component and can be install only by qualified personnel. Any alteration or conversion of the towing hitch is prohibited and would lead to cancellation of design certification. Remove insulating compound and underseal from vehicle (if present) in the area of the matting surfaces of the towing hitch.
The vehicle manufacturer's specifications regarding trailer load and max. vertical cup load are decisive for driving whereat values for the towing hitch cannot be exceeded.
D-value formula:

$$\frac{\text{Max trailer weight [kg]} \times \text{Max vehicle weight [kg]}}{\text{Max trailer weight [kg]} + \text{Max vehicle weight [kg]}} \times \frac{9{,}81}{1000} = D\ [\text{kN}]$$