FITTING INSTRUCTION

Clamp mark in acc. with		Cables joining
ISO	PN	
1	L	Left directional lights
2	+	Rear fog lights
3	31	Ground
4	R	Right directional lights
5	58R	Right side parking lights
6	54	Stoplights
7	58L	Left side parking lights

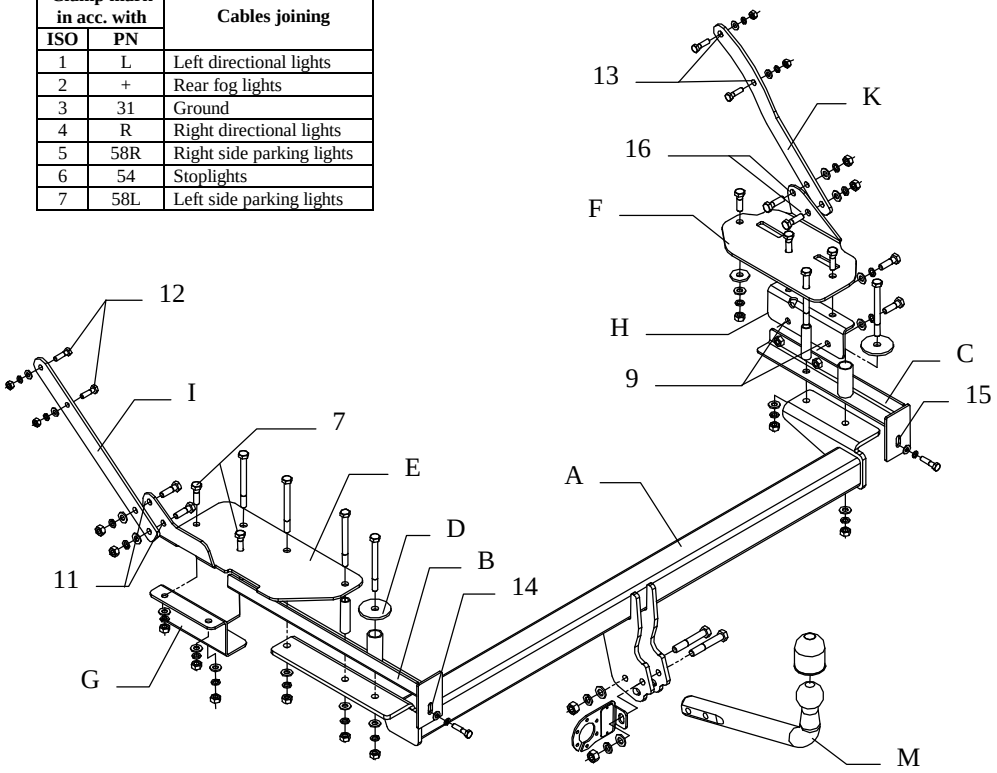

This towbar is designed to assembly in following cars:
FORD SCORPIO II Lim., produced since 10.1994 till 1999., catalogue no. **C30** and is prepared to tow trailers max total weight **2000 kg** and max vertical load **75 kg.**

Fitting instructions

1. To install our towbar please disassemble the bumper and unscrew from inside his handles (not used any more).
2. Take off the muffler from rear handle.
3. Take out fading from floor of the trunk and rear and side panels.
4. On figure no. 2 is chassis from below the car: holes 1, 2, 3, 4 and 5 was factory made, drill it to inside the trunk using bit ø13mm. Mark missing hole no. 6 and drill it in this way opening too.

   Attention ! All holes make very carefully and according with dimensions on drawing no 2. This will make all installation easy.
5. Holes 2, 3, 5 and 6 drill again by bit ø17mm (only from trunk side) .
6. To chassis members slip brackets pos. B and C. Bracket pos. B is longer (left) and bracket pos. C is shorter (right). Both elements slip in this way so sleeves agree with holes 1 and 4 , dwg. 2. Then put washers ø58xø13x5-pos. D on this holes.
   Put bolts M10x110 (not screw up).
7. In holes 2, 3, 5 and 6 put sleeves ø17mm, lenght 68mm.
8. On holes 2, 3 and 6 put fish-plate pos. E, insert bolts M10x110mm (not screw up).
9. On holes pos. 5 put fish-plate pos. F, insert bolt M10x110 (not screw up).
10. From below the car, on protruding bolts put main bar of the towbar pos. A and fix by nuts M10 (loosely).
11. Through holes pos. 7 (in fish-plate pos. E) drill hole by bit ø11mm, next from below the car put fish-plate pos. G in shape of letter ”Z” and screw it by bolts M10x35 and M10x110 see drawing no.1.
12. Through holes pos. 8 (in fish-plate pos. F) drill holes ø11mm, next from below the car put fish-plate pos. H (in shape of angle bar) and screw it by bolts M10x35mm.
13. Through holes pos. 9 (in fish-plate pos. H) drill holes ø11mm. Holes make carefully with attention at welded nuts on bracket pos. C. Fix fish-plate pos. H with bracket pos. C by bolts M10x35.
14. Fix jib pos. I through holes pos. 11 (in fish-plate pos. E) by bolts M10x35. Next through holes pos. 12 fix it to car body by bolts M8x30.
15. Fix jib pos. K through holes pos. 16 (in fish-plate pos. F) by bolts M10x35. Next through holes pos. 13 fix it to car body by bolts M8x30.
16. Tighten all bolts according to the torque shown in the table.
17. Fix the bumper to brackets pos. B and C by bolts M8x35 through holes pos. 14 and 15.
18. Screw tow-ball (pos. M) and socket plate using bolts M12x75mm from equipment.
19. Mount muffler and panels in the trunk.
20. Connect electric wires of 7-pole socket according to the instruction of the car. (Recommend to make at authorized service station)
21. Complete paint layer damaged during installation.

Torque settings for nuts and bolts (8,8):

M8	25 Nm	**M10**	55Nm
M12	85 Nm	**M14**	135 Nm

Fig. 2 . Chassis frame (from below the car)

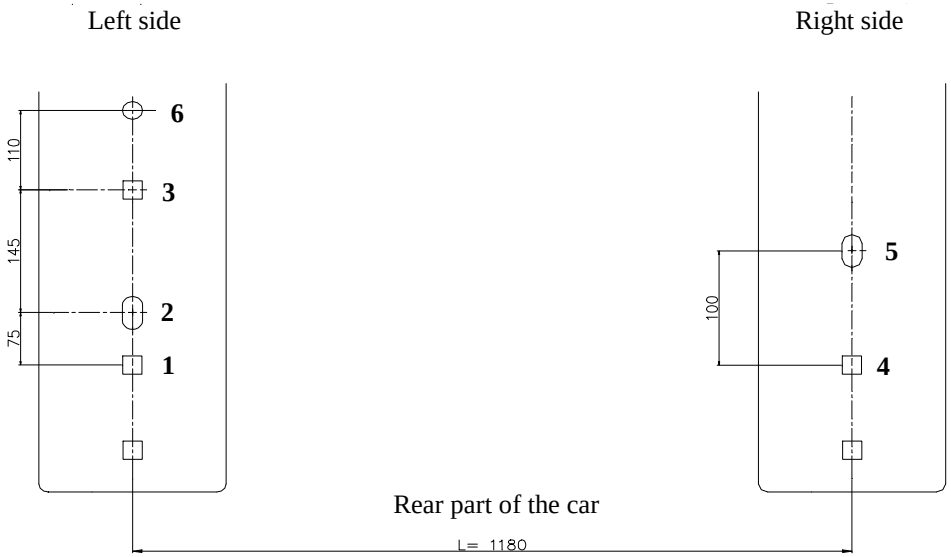

NOTE

After install the towbar you should get adequate note in registration book (at authorised service station).The car should be equipped with:

- Indicators
- Tow mirrors

After 1000km check all bolts and nuts. The ball of towbar must be always kept clear and conserve with a grease.

PPUH AUTO-HAK S.J.

Produkcja Haków Holowniczych
Henryk & Zbigniew Nejman
76-200 SŁUPSK ul. Słoneczna 16K
tel/fax (059) 8-414-414; 8-414-413
e-mail: office@autohak.com.pl
www. autohak.com.pl

Towing hitch (without electrical set)

Class: **A50-X** Cat. no. **C30**
Designed for:
Manufacturer: **FORD**
Model: **SCORPIO II**
Type: **Limousine**
produced since 10.1994 till 1999

Technical data:
maximum D-value: **9,81 kN**
maximum trailer weight: **2000 kg**
maximum vertical cup load: **75 kg**

Approval number acc. to regulations EKG/ONZ 55.01: E20-55R-01 1612

Foreword

This towbar is designed according to rules of safety traffic regulations. The towing hitch is a safety component and can be install only by qualified personnel. Any alteration or conversion of the towing hitch is prohibited and would lead to cancellation of design certification. Remove insulating compound and underseal from vehicle (if present) in the area of the matting surfaces of the towing hitch.

The vehicle manufacturer's specifications regarding trailer load and max. vertical cup load are decisive for driving whereat values for the towing hitch cannot be exceeded.

D-value formula:

$$\frac{\text{Max trailer weight [kg]} \times \text{Max vehicle weight [kg]}}{\text{Max trailer weight [kg]} + \text{Max vehicle weight [kg]}} \times \frac{9{,}81}{1000} = D\ [\text{kN}]$$