FITTING INSTRUCTION

Clamp mark in acc. with		Cables joining
ISO	PN	
1	L	Left directional lights
2	+	Rear fog lights
3	31	Ground
4	R	Right directional lights
5	58R	Right side parking lights
6	54	Stoplights
7	58L	Left side parking lights

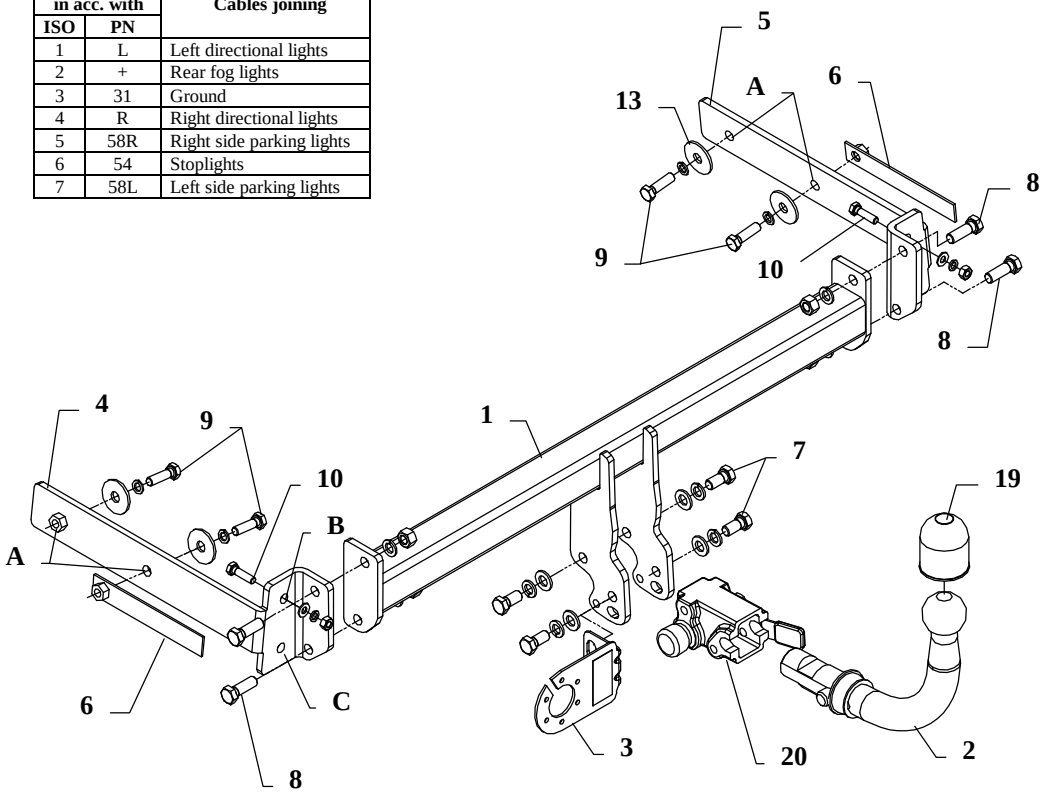

This towbar is designed to assembly in following cars:
FORD FOCUS, 4 doors, produced since 1998 till 2005, catalogue no. **C28A** and is prepared to tow trailers max total weight **1635 kg** and max vertical load **50 kg**.

From manufacturer

Thank you for buying our product. Their reliability has been confirmed in many tests. Reliability of towbar depends also on correct assembly and right operation. For this reasons we kindly ask to read carefully this instruction and apply to hints.

The towbar should be install in points described by a car producer.

The instruction of the assembly

1. To install our towbar first disassemble the bumper.
2. Get lower muffler (take out from rubber handles) and disassemble thermal shield of muffler.
3. To chassis members put side brackets (pos. 4 and 5) and through holes (pos. A) fix loosely using bolts M10x35mm (pos. 9).
4. Through holes (pos. B) fix loosely using bolts M8x35mm (pos. 10). Nuts M8, remaining after reinforcement disassembly, use to fix parts in holes (pos. C) – in this points exist bolts.
5. Between mounted brackets put main bar of towbar (pos. 1) and screw using bolts M12x35mm (pos. 8) from accessories.
6. Tighten all bolts according to the torque shown in the table.
7. Reassemble thermal shield and muffler.
8. Reassemble the bumper.
9. Fix body of the automat (pos. 20) and the socket plate (pos. 3) using bolts M12x25mm (pos. 7) from accessories. Place tow-ball (pos. 2) according to supplied instruction.
10. Connect electric wires of 7-poles socket according to the instruction of the car. (Recommend to make at authorized service station).
11. Complete the paint coating damaged during installation.

Torque settings for nuts and bolts (8,8):	
M 8 - 25 Nm	**M 10** - 55 Nm
M 12 - 85 Nm	**M 14** - 135 Nm

NOTE

After install the towbar you should get adequate note in registration book (at authorised service station).The car should be equipped with:

- Indicators
- Tow mirrors

After 1000km check all bolts and nuts. The ball of towbar must be always kept clear and conserve with a grease.

Towbar accessories:

Pos. 1 Name: Main bar Quantity: 1 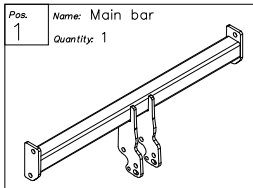	Pos. 5 Name: Right bracket Quantity: 1 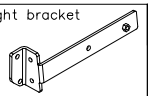	Pos. 10 Name: Bolt 8,8 B Quantity: 2 Dim. : M8x30mm 	Pos. 16 Name: Spring washer Quantity: 8 Dim. : ø 12,2 mm 
	Pos. 6 Name: Jib with the nut Quantity: 2 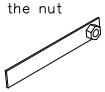	Pos. 11 Name: Nut 8 B Quantity: 4 Dim. : M12 	Pos. 17 Name: Spring washer Quantity: 4 Dim. : ø 10,2 mm 
Pos. 2 Name: Tow ball Quantity: 1 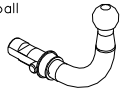	Pos. 7 Name: Bolt 8,8 B Quantity: 4 Dim. : M12x25mm 	Pos. 12 Name: Nut 8 B Quantity: 2 Dim. : M8 	Pos. 18 Name: Spring washer Quantity: 2 Dim. : ø 8,2 mm 
Pos. 3 Name: Socket plate Quantity: 1 	Pos. 8 Name: Bolt 8,8 B Quantity: 4 Dim. : M12x35mm 	Pos. 13 Name: Washer Quantity: 4 Dim. : ø35xø12x3mm 	Pos. 19 Name: Ball cover Quantity: 1 
Pos. 4 Name: Left bracket Quantity: 1 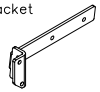	Pos. 9 Name: Bolt 8,8 B Quantity: 4 Dim. : M10x35mm 	Pos. 14 Name: Plain washer Quantity: 4 Dim. : ø 13 mm 	Pos. 20 Name: Body of the automat Quantity: 1 
		Pos. 15 Name: Plain washer Quantity: 2 Dim. : ø 8,5 mm 	Pos. 21 Name: Body plug Quantity: 1 

PPUH AUTO-HAK S. J.

Produkcja Haków Holowniczych
Henryk & Zbigniew Nejman
76-200 SŁUPSK ul. Słoneczna 16K
tel/fax (059) 8-414-414; 8-414-413
E-mail: office@autohak.com.pl
www.autohak.com.pl

Towing hitch (without electrical set)

Class: **A50-X** Cat. no. **C28A**
Designed for:
Manufacturer: **FORD**
Model: **FOCUS**
Type: **4doors**
produced since 1998 till 2005

Technical data:
D-value: **8,03 kN**
maximum trailer weight: **1635 kg**
maximum vertical cup load: **50 kg**

Approval number acc. to regulations EKG/ONZ 55.01: E20-55R-01 1195

Foreword

This towbar is designed according to rules of safety traffic regulations. The towing hitch is a safety component and can be install only by qualified personnel. Any alteration or conversion of the towing hitch is prohibited and would lead to cancellation of design certification. Remove insulating compound and underseal from vehicle (if present) in the area of the matting surfaces of the towing hitch.
The vehicle manufacturer's specifications regarding trailer load and max. vertical cup load are decisive for driving, and values for the towing hitch cannot be exceeded.
D-value formula:

$$\frac{\text{Max trailer weight [kg]} \times \text{Max vehicle weight [kg]}}{\text{Max trailer weight [kg]} + \text{Max vehicle weight [kg]}} \times \frac{9{,}81}{1000} = D\ [\text{kN}]$$