FITTING INSTRUCTION

Clamp mark in acc. with		Cables joining
ISO	PN	
1	L	Left directional lights
2	+	Rear fog lights
3	31	Ground
4	R	Right directional lights
5	58R	Right side parking lights
6	54	Stoplights
7	58L	Left side parking lights

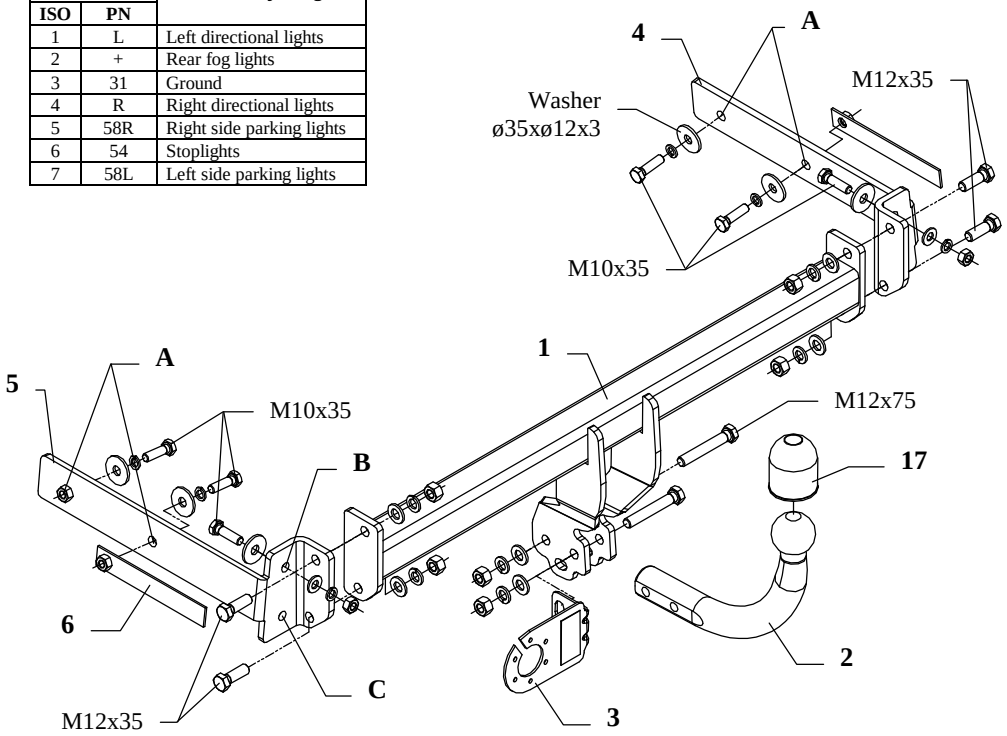

This towbar is designed to assembly in following cars: **FORD FOCUS, 3-5 doors,** produced since 1998 till 2004, catalogue no. **C27** and is prepared to tow trailers max total weight **1400 kg** and max vertical load **50 kg**.

From manufacturer

Thank you for buying our product. Their reliability has been confirmed in many tests. Reliability of towbar depends also on correct assembly and right operation. For this reasons we kindly ask to read carefully this instruction and apply to hints.

The towbar should be install in points described by a car producer.

The instruction of the assembly

1. Disassemble the rear bumper and then unscrew the metal profile. This profile will not be reassemble.
2. Lower the silencer from the rubber handle and remove the thermal silencer protection.
3. Put side brackets (pos. 4 and 5) to chassis members and then fix loosely through holes (pos. A) using bolts M10x35mm (pos. 9). **Attention!** Use jibs with nuts (pos. 6).
4. Fix loosely through holes (pos. B) using M10x35mm (pos. 9), but through holes (pos. C) fix using nuts M8 (use from the unscrewed metal profile).
5. Position the main bar of the towbar (pos. 1) between mounted brackets (pos. 4 and 5) and fix with M12x35mm (pos. 8) from the towbar accessories.
6. Reassemble the rear bumper
7. Position the ball of towbar (pos. 2) with socket plate (pos. 3) and fix with bolts M12x75mm (pos. 7) from the towbar accessories.
8. Tighten all nuts and bolts according to the torque shown in the table.
9. Connect the electric wires according to the instructions of the car.
10. Complete the paint cover of towbar (during the mounting paint cover could be destroyed).

Torque settings for nuts and bolts (8,8):	
M 8 - 25 Nm	**M 10 -** 55 Nm
M 12 - 85 Nm	**M 14 -** 135 Nm

NOTE

After install the towbar you should get adequate note in registration book (at authorised service station).The car should be equipped with:

- Indicators
- Tow mirrors

After 1000km check all screws. The ball of towbar must be always kept clear and conserve with a grease.

Towbar accessories:

Pos. 1 Name: Main bar Quantity: 1 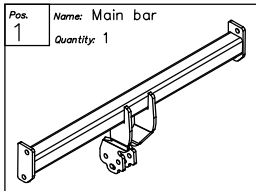	Pos. 4 Name: Right bracket Quantity: 1 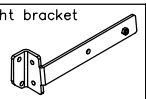	Pos. 8 Name: Bolt 8,8 B Quantity: 4 Dim. : M12x35mm 	Pos. 13 Name: Plain washer Quantity: 6 Dim. : ø 13 mm 
	Pos. 5 Name: Left bracket Quantity: 1 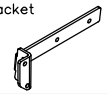	Pos. 9 Name: Bolt 8,8 B Quantity: 6 Dim. : M10x35mm 	Pos. 14 Name: Plain washer Quantity: 2 Dim. : ø 10,5 mm 
Pos. 2 Name: Tow ball Quantity: 1 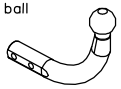	Pos. 6 Name: Jib with the nut Quantity: 2 	Pos. 10 Name: Washer Quantity: 6 Dim. : ø35xø12x3mm 	Pos. 15 Name: Spring washer Quantity: 6 Dim. : ø 12,2 mm 
Pos. 3 Name: Socket plate Quantity: 1 	Pos. 7 Name: Bolt 8,8 B Quantity: 2 Dim. : M12x75mm 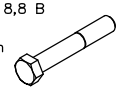	Pos. 11 Name: Nut 8 B Quantity: 6 Dim. : M12 	Pos. 16 Name: Spring washer Quantity: 6 Dim. : ø 10,2 mm 
		Pos. 12 Name: Nut 8 B Quantity: 2 Dim. : M10 	Pos. 17 Name: Ball cover Quantity: 1 

PPUH AUTO-HAK S.J.

Produkcja Haków Holowniczych
Henryk & Zbigniew Nejman
76-200 SŁUPSK ul. Słoneczna 16K
tel/fax (059) 8-414-414; 8-414-413
E-mail: office@autohak.com.pl
www.autohak.com.pl

Towing hitch (without electrical set)

Class: **A50-X** Cat. no. **C27**
Designed for:
Manufacturer: **FORD**
Model: **FOCUS**
Type: **3-5 doors**
produced since 1998 till 2004

Technical data:
D-value: **7,55 kN**
maximum trailer weight: **1400 kg**
maximum vertical cup load: **50 kg**

Approval number acc. to regulations EKG/ONZ 55.01: E20-55R-01 0697

Foreword

This towbar is designed according to rules of safety traffic regulations. The towing hitch is a safety component and can be install only by qualified personnel. Any alteration or conversion of the towing hitch is prohibited and would lead to cancellation of design certification. Remove insulating compound and underseal from vehicle (if present) in the area of the matting surfaces of the towing hitch.
The vehicle manufacturer's specifications regarding trailer load and max. vertical cup load are decisive for driving whereat values for the towing hitch cannot be exceeded.
D-value formula:

$$\frac{\text{Max trailer weight [kg]} \times \text{Max vehicle weight [kg]}}{\text{Max trailer weight [kg]} + \text{Max vehicle weight [kg]}} \times \frac{9{,}81}{1000} = D\ [kN]$$